USER MANUAL

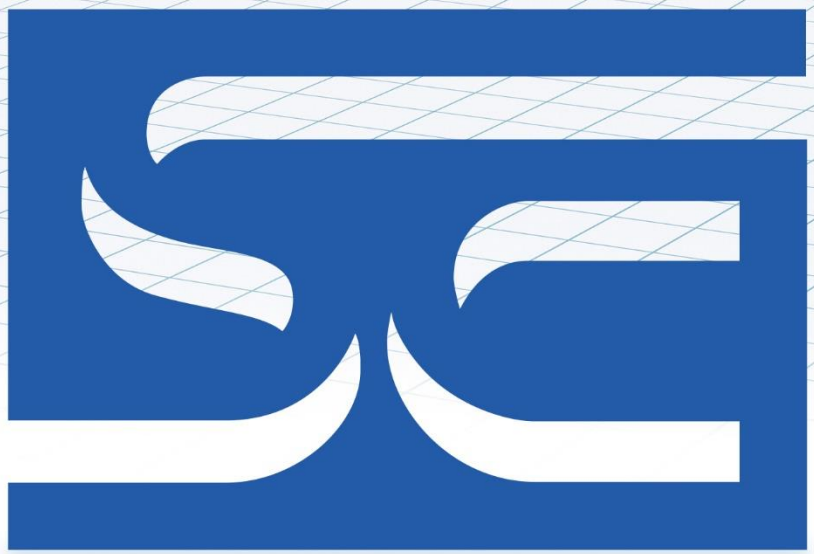

User's Manual Pub. 0300316-01 Rev. C

1734 4-Channel Universal Input Module

Catalog Number: 1734sc-IF4U-1/1734sc-IF4UK-1

SPECTRUM CONTROLS

Important Notes

1. Please read all the information in this owner’s guide before installing the product.
2. The information in this owner's guide applies to hardware Series A and firmware version 1.00 or later.
3. This guide assumes that the reader has a full working knowledge of the relevant processor.

Notice

The products and services described in this owner's guide are useful in a wide variety of applications. Therefore, the user and others responsible for applying the products and services described herein are responsible for determining their acceptability for each application. While efforts have been made to provide accurate information within this owner's guide, Spectrum Controls, Inc. assumes no responsibility for the accuracy, completeness, or usefulness of the information herein.

Under no circumstances will Spectrum Controls, Inc. be responsible or liable for any damages or losses, including indirect or consequential damages or losses, arising out of either the use of any information within this owner's guide or the use of any product or service referenced herein.

No patent liability is assumed by Spectrum Controls, Inc. with respect to the use of any of the information, products, circuits, programming, or services referenced herein.

The information in this owner's guide is subject to change without notice.

Limited Warranty

Spectrum Controls, Inc. warrants that its products are free from defects in material and workmanship under normal use and service, as described in Spectrum Controls, Inc. literature covering this product, for a period of 1 year. The obligations of Spectrum Controls, Inc. under this warranty are limited to replacing or repairing, at its option, at its factory or facility, any product which shall, in the applicable period after shipment, be returned to the Spectrum Controls, Inc. facility, transportation charges prepaid, and which after examination is determined, to the satisfaction of Spectrum Controls, Inc., to be thus defective.

This warranty shall not apply to any such equipment which shall have been repaired or altered except by Spectrum Controls, Inc. or which shall have been subject to misuse, neglect, or accident. In no case shall the liability of Spectrum Controls, Inc. exceed the purchase price. The aforementioned provisions do not extend the original warranty period of any product which has either been repaired or replaced by Spectrum Controls, Inc.

Table of Contents

IMPORTANT NOTES ..... **II**

LIMITED WARRANTY ..... **II**

CHAPTER 1 MODULE OVERVIEW **1-1**

SECTION 1.1 GENERAL DESCRIPTION 1-2
SECTION 1.2 INPUT TYPES 1-2
SECTION 1.3 DATA FORMATS 1-3
SECTION 1.4 FILTER FREQUENCIES 1-3
SECTION 1.5 HARDWARE FEATURES 1-3
1.5.1 LED Indicators *1-5*
SECTION 1.6 SYSTEM OVERVIEW 1-6
1.6.1 Module Power-up *1-6*
1.6.2 Module Operation *1-6*

CHAPTER 2 INSTALLATION AND WIRING **2-1**

SECTION 2.1 COMPLIANCE TO EUROPEAN UNION DIRECTIVES 2-1
2.1.1 EMC Directive *2-1*
2.1.2 ATEX Directive *2-1*
SECTION 2.2 POWER REQUIREMENTS 2-2
SECTION 2.3 GENERAL CONSIDERATIONS 2-2
2.3.1 Hazardous Location Considerations *2-2*
2.3.1 Prevent Electrostatic Discharge *2-3*
2.3.2 Remove Power *2-3*
2.3.3 Selecting a Location *2-3*
SECTION 2.4 MOUNTING 2-4
2.4.1 Before You Begin *2-4*
2.4.2 Install Mounting Base *2-5*
2.4.3 Install the I/O Module *2-5*
2.4.4 Install the Removable Terminal Block (RTB) *2-7*
2.4.5 Remove a Mounting Base *2-7*
2.4.6 Install a 1734-TOPS Base *2-7*
2.4.7 Remove a 1734-TOPS Base *2-7*
SECTION 2.5 FIELD WIRING CONNECTIONS 2-8
2.5.1 Wiring Diagram *2-9*
2.5.2 System Wiring Configurations *2-10*

CHAPTER 3 CONFIGURING THE 1734SC-IF4U-1 USING RSLOGIX 5000 ..... **3-1**

SECTION 3.1 INTRODUCTION 3-1
SECTION 3.2 ABOUT COMMUNICATIONS 3-1
SECTION 3.3 USE GENERIC PROFILE 3-2
3.3.1 Add a Local Ethernet Bridge Module *3-3*
3.3.2 Add a Remote Ethernet Point IO Adapter *3-5*
3.3.3 Add the Generic Point IO Module *3-7*
SECTION 3.4 USE ADD-ON-PROFILE 3-8
3.4.1 Installing the Add-On Profile *3-8*
3.4.2 Adding the IF4U-1 Module to Your Logix Project *3-9*
SECTION 3.5 MODULE CONFIGURATION 3-10
3.5.1 Channel Configuration Details *3-12*
3.5.2 RTD Accuracy *3-13*
SECTION 3.6 READ INPUT DATA 3-16

3.6.1 Input Assembly Status Bit Definitions *3-17*

APPENDIX A MODULE SPECIFICATIONS.....**A-1**

INDEX **I-1**

Preface

Read this preface to familiarize yourself with the rest of the manual. This preface covers the following topics:

- Who should use this manual
- How to use this manual
- Related documentation
- Technical support
- Documentation
- Conventions used in this manual

Who Should Use This Manual

Use this manual if you are responsible for designing, installing, programming, or troubleshooting control systems that use Allen-Bradley I/O and/or compatible controllers, such as CompactLogix and ControlLogix.

How to Use This Manual

As much as possible, we organized this manual to explain, in a task-by-task manner, how to install, configure, program, operate, and troubleshoot a control system using the 1734sc-IF4U-1.

Related Documentation

The table below provides a listing of publications that contain important information about Allen-Bradley PLC systems.

For	Refer to this Document	Allen-Bradley Pub. No.
A description and overview of the 1734 and 1734D series POINT I/O modules and compatible control platforms. Also includes an overview of how to specify a POINT I/O system.	POINT I/O Selection Guide	1734-SG001
Information about how to install the 1734-EP24DC, Series B POINT I/O 24 VDC Expansion Power Supply.	Expansion Power Supply Installation Instructions	1734-IN058
Information about how to install 1734-TB and -TBS POINT I/O Wiring Base Assemblies	Wiring Base Assembly Installation Instructions	1734-IN511
Information about how to install 1734-TB3 and -TB3S POINT I/O Wiring Base Assemblies.	Wiring Base Assembly Installation Instructions	1734-IN013

Technical Support

For technical support, please contact your local Rockwell Automation TechConnect Office for all Spectrum products. Contact numbers are as follows:

- USA 440-646-6900
- United Kingdom 01908 635230
- Australia 1800-809-929
- Mexico 001-888-365-8677
- Brazil (55) 11 3618 8800
- Europe +49 211 41553 63

or send an email to support@spectrumcontrols.com

Documentation

If you would like a manual, you can download a free electronic version from the Internet at www.spectrumcontrols.com

Conventions Used in This Manual

The following conventions are used throughout this manual:

- Bulleted lists (like this one) provide information not procedural steps.
- Lists provide sequential steps or hierarchical information.
- *Italic* type is used for emphasis.
- **Bold** type identifies headings and sub-headings:

WARNING	Identifies information about practices or circumstances that can lead to personal injury or death, property damage, or economic loss. These messages help you to identify a hazard, avoid a hazard, and recognize the consequences.

ATTENTION	Actions ou situations risquant d'entraîner des blessures pouvant être mortelles, des dégâts matériels ou des pertes financières. Les messages « Attention » vous aident à identifier un danger, à éviter ce danger et en discerner les conséquences.

NOTE	Identifies information that is critical for successful application and understanding of the product.

Chapter 1
Module Overview

This chapter describes the 1734sc-IF4U and the conformally coated 1734sc-IF4KU-1 modules. Other than the conformal coating, both modules are identical so all information applicable to the 1734sc-IF-1 also applies to the K version. The 1734sc-IF4U-1 module has four analog input channels that support current, voltage, RTD, resistance, and thermocouple input types.

NOTE	For applications that require it, the 1734sc-IF4U-1 provides greater RTD accuracy than the 1734sc-IF4U.

This chapter includes information about:

- General description
- Input types
- Data formats
- Filter frequencies
- Hardware features
- System overview
- Module operation

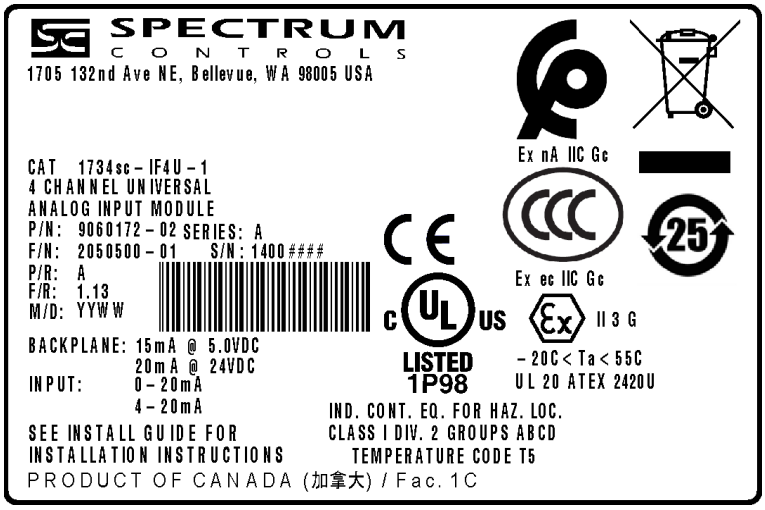

Section 1.1 General Description

The IF4U-1 module digitally converts and stores analog data for each configured input. Each input channel can be independently configured for input type, data format, and filter frequency.

NOTE	All Spectrum Controls 1734sc modules also function normally when attached to 1769-L1*x* processors. These processors allow 1734sc modules to be attached directly to the side and become local IO.

Section 1.2 Input Types

The IF4U-1 module supports the following input types.

Table 1-1. Input Types

Input Type	Range
E Type Thermocouple	-270 to 1000 ˚C (-454 to 1832 ˚F)
J Type Thermocouple	-210 to 1200 ˚C (-346 to 2192 ˚F)
K Type Thermocouple	-270 to 1370 ˚C (-454 to 2498 ˚F)
T Type Thermocouple	-270 to 400 ˚C (-270 to 752 ˚F)
100 Ω Pt α 0.385	-200 to 850 ˚C (-328 to 1562 ˚F)
1000 Ω Pt α 0.385	-200 to 850 ˚C (-328 to 1562 ˚F)
100 Ω Pt α 0.3916	-200 to 630 ˚C (-328 to 1166 ˚F)
1000 Ω Pt α 0.3916	-200 to 630 ˚C (-328 to 1166 ˚F)
Resistance	0 to 3000Ω
Voltage	±50 mV
	±100 mV
	±1 V
	0 to 5 V
	1 to 5 V
	±9 V
	0 to 9 V
Current	4 to 20 mA
	0 to 20 mA
CJC	-25 to 85 ˚C

Section 1.3 Data Formats

For each channel, the data can be configured for:

- Engineering units ×1
- Engineering units ×10
- Scaled-for-PID
- Raw/proportional counts

Section 1.4 Filter Frequencies

The module uses a notch filter to provide noise rejection for each input channel.

The filter for each channel is programmable, allowing you to select from 4 different filter options:

- 4.17 Hz
- 16.7 Hz
- 62 Hz
- 470 Hz

Section 1.5 Hardware Features

Channels are wired as differential inputs.

Module configuration is done via the controller's programming software. The module configuration is stored in the memory of the controller. Refer to your controller's user manual for more information. The illustration below shows the module's hardware features.

Figure 1-1. Hardware Diagram

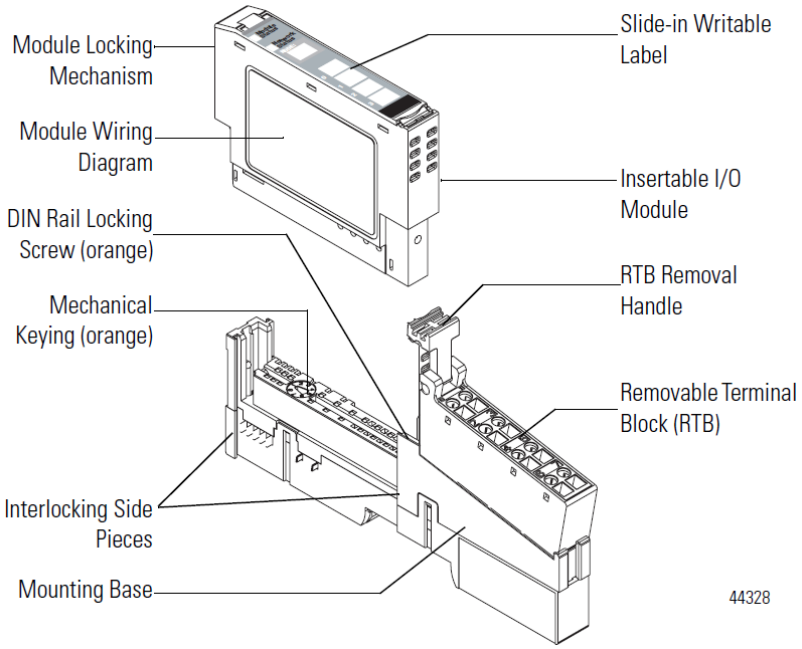

Figure 1-2. Hardware Details

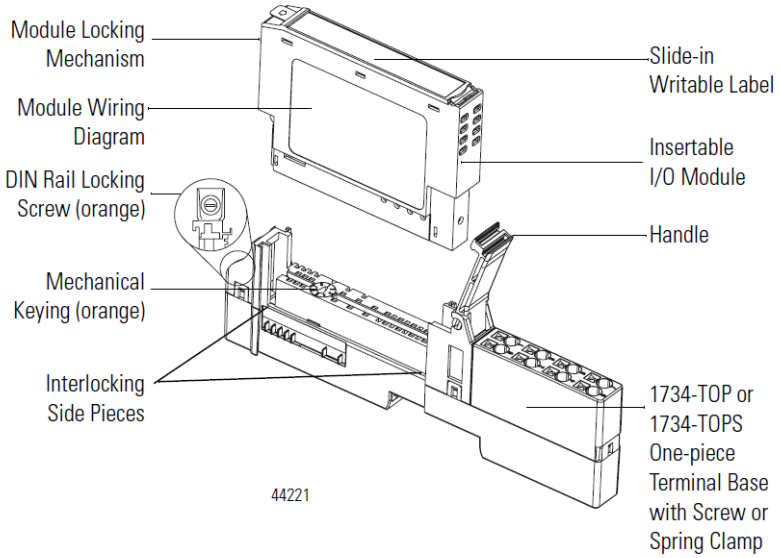

1.5.1 LED Indicators

The 1734 analog HART module uses several LEDs to show operational status. The status LEDs are defined below:

Table 1-2. LED Status Indicators

Indicator	State	Description
Module Status	Off	No power applied to device.
	Solid Green	Device operating normally.
	Flashing Green	Device needs commissioning due to configuration missing, incomplete, or incorrect. NOTE: The module always sets default values for invalid configurations. Therefore, this status will not be shown.
	Flashing Red	Not used with this module.
	Solid Red	Recoverable fault. ADC communications fault, or backplane communications error.
	Flashing Red/Green	Device is in self-test mode. This is only used during factory test and power-up.
Channel Status	Off	Channel disabled. Will remain off after power-up until connection established. Analog processing will not take place if no connection is made.
	Solid Green	Normal (channel scanning inputs).
	Flashing Green	Calibration mode.
	Solid Red	Major channel fault. ADC communications fault. Analog values will remain at current state until fault has recovered.
	Flashing Red	Channel at end of range.
	Flashing Red/Green	Displayed during power-up.
Network Status	Off	Device not powered/Not online.
	Solid Green	Device operational AND online AND connected.
	Flashing Green	Device operational AND online but not connected. OR Device online AND device needs commissioning.
	Flashing Red	Minor fault AND/OR connection timeout AND/OR no network power.
	Solid Red	Critical fault OR critical link failure.

Indicator	State	Description
	Flashing Red/Green	Communication faulted and received an identify comm fault request - long protocol. Also displayed during power-up.

Section 1.6 System Overview

The module communicates to the controller via a 1734 Control Net, Device Net, or Ethernet adapter. The module receives 5 and 24 VDC power through the bus interface.

1.6.1 Module Power-up

At power-up, the module performs a check of its internal circuits, memory, and basic functions. If no faults are found during power-up diagnostics, the module status LED is turned on.

After power-up checks are complete, the module waits for valid channel configuration data. If an invalid configuration is detected, the module will generate a PLC fault. Once a channel is properly configured and enabled, it continuously converts the input data to a value within the range selected for that channel.

1.6.2 Module Operation

The 1734sc-IF4U-1 module provides four, independent, analog input channels. Each channel includes four selectable filter settings, and can be configured for voltage, thermocouple, current, resistance, or RTD input types.

The 1734sc-IF4U-1 module uses a 20-bit Sigma-Delta ADC (Analog to Digital Converter) to achieve 18-bit resolution. (This may be limited to 16-bits resolution by backplane communication.) Inputs to the ADC are first multiplexed through analog switches, and then buffered by a precision, low offset and drift, programmable gain amplifier. The ADC also provides the programmable current source used in resistive measurements.

The 1734sc-IF4U-1 plug-in module communicates over its isolated CAN Bus interface through the module backplane. The 1734 network adapter then communicates to the PLC controller.

See the block diagram below:

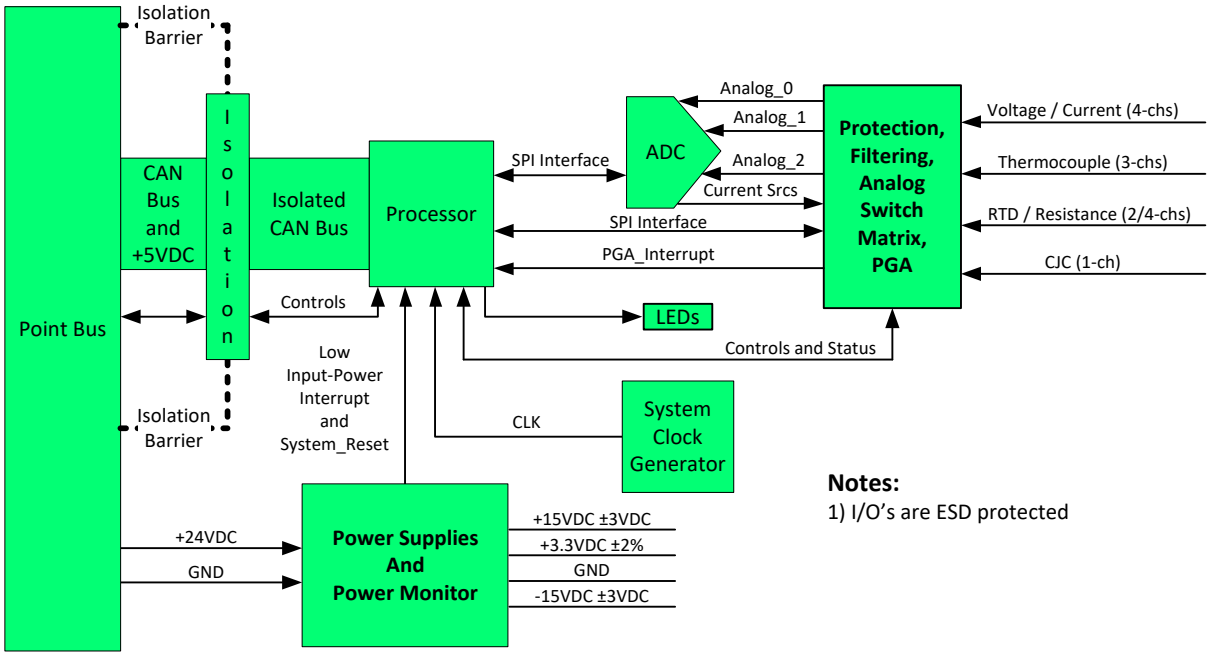

Notes:
1) I/O's are ESD protected

Chapter 2
Installation and Wiring

This chapter will cover:

- Compliance to European union directives
- Power requirements
- General considerations
- Mounting
- Field wiring connections

Section 2.1 Compliance to European Union Directives

This product is approved for installation within the European Union and EEA regions. It has been designed and tested to meet the following directives.

2.1.1 EMC Directive

The 1734sc-IF4U-1 module is tested to meet Council Directive 2014/30/EU Electromagnetic Compatibility (EMC) and the following standards, in whole or in part, documented in a technical construction file:

- EN 61000-6-4 Electromagnetic compatibility (EMC)–Part 6-4: Generic standards–Emission standard for industrial environments.
- EN 61000-6-2 Electromagnetic compatibility (EMC)–Part 6-2: Generic standards–Immunity for industrial environments.

UKCA Electromagnetic Compatibility Regulations 2016

- BS EN 61131-2, BS EN 61000-6-4, BS EN 61000-6-2.This product is intended for use in an industrial environment.

2.1.2 ATEX Directive

This product is tested to meet Council Directive 2014/30/U/ATEX, and the following standards, in whole or in part, documented in a technical construction file:

- EN 60079-0 Explosive atmospheres – Part 0: Equipment – General requirements
- EN 60079-7 Explosive atmospheres – Part 7: Equipment protection by increased safety "e"

This module also meets the standards for the United Kingdom Equipment and Protective Systems Intended for use in Potentially Explosive Atmospheres Regulations 2016:

- BS EN 60079-0
- BS EN 60079-7

Section 2.2 Power Requirements

NOTE	Your 24 V external power supply for the AENT adapter supplies the same GND used for the analog portion of the IF4U-1. If you measure a voltage source with its negative terminal also attached to chassis GND, the module may be susceptible to noise (especially at greater Vin values while only one channel is attached), IF the external power supply introduces a high level of noise between its GND and chassis GND. To remedy this, you may try a different power supply; attach the negative terminal of the power supply to chassis GND, or simply disconnect chassis GND from the negative terminal of voltage source being measured.

WARNING	HAZARD OF DAMAGE to the 1734sc-IF4U-1 Module Do NOT use a 1734-EPAC power supply. This outputs 120 VAC to the +24 V input of the IF4U-1 module. Use a power supply that matches the +24 V input.

The module receives power through the bus interface from the +5 VDC/+24 VDC system power supply. The maximum current drawn by the module is shown in the table below:

5 VDC	**24 VDC**
15 mA (maximum)	20 mA (maximum)

Section 2.3 General Considerations

1734 I/O is suitable for use in an industrial environment when installed in accordance with these instructions. Specifically, this equipment is intended for use in clean, dry environments Pollution degree 2[1] and to circuits not exceeding Over Voltage Category II[2](IEC 60664-1)[3].

2.3.1 Hazardous Location Considerations

This equipment is suitable for use in Class I, Division 2, Groups A, B, C, D or non-hazardous locations only. The following WARNING statement applies to use in hazardous locations.

[1] Pollution Degree 2 is an environment where, normally, only non-conductive pollution occurs except that occasionally a temporary conductivity caused by condensation shall be expected.
[2] Over Voltage Category II is the load level section of the electrical distribution system. At this level transient voltages are controlled, and do not exceed the impulse voltage capability of the product's insulation.
[3] Pollution Degree 2 and Over Voltage Category II are International Electrotechnical Commission (IEC) designations.

WARNING	**EXPLOSION HAZARD** • Substitution of components may impair suitability for Class I, Division 2. • Do not replace components or disconnect equipment unless power has been switched off or the area is known to be non-hazardous. Touch a grounded object to discharge static potential. • Do not connect or disconnect components unless power has been switched off or the area is known to be non-hazardous. • This product must be installed in an IP54 rated enclosure. • All wiring must comply with N.E.C. article 501-4(b).

2.3.2 Prevent Electrostatic Discharge

WARNING	Electrostatic discharge can damage integrated circuits or semiconductors if you touch analog I/O module bus connector pins or the terminal block on the input module. Follow these guidelines when you handle the module: • Touch a grounded object to discharge static potential. • Wear an approved wrist-strap grounding device. • Do not touch connectors or pins on component boards. • Do not touch circuit components inside the module. • If available, use a static-safe workstation. • When not in use, keep the module in its static-shield box.

2.3.3 Remove Power

WARNING	Remove power before removing or inserting this module. When you remove, or insert, a module with power applied, an electrical arc may occur. An electrical arc can cause personal injury or property damage by: • Sending an erroneous signal to your system's field devices, causing unintended machine motion. • Causing an explosion in a hazardous environment. • Electric arcing causes excessive wear to contacts on both the module and its mating connector and may lead to premature failure.

2.3.4 Selecting a Location

Reducing Noise

Most applications require installation in an industrial enclosure to reduce the effects of electrical interference. Analog inputs are highly susceptible to electrical noise. Electrical noise coupled to the analog inputs will reduce the performance (accuracy) of the module. Group your modules to minimize adverse effects from radiated electrical noise and heat.

Consider the following conditions when selecting a location for the analog module. Position the module:

- Away from sources of electrical noise such as hard-contact switches, relays, and AC motor drives.
- Away from modules which generate significant radiated heat. Refer to the module's heat dissipation specification.

In addition, route shielded, twisted-pair, analog input wiring away from any high voltage I/O wiring.

Section 2.4 Mounting

2.4.1 Before You Begin

Note that this series C product can be used with the following:

- ControlNet and EtherNet/IP adapters ONLY, using RSLogix 5000 software, version 11 or later.

See the figures to familiarize yourself with major parts of the module, noting that the wiring base assembly is one of the following:

- 1734-TB or 1734-TBS POINT I/O two-piece terminal base, which includes the 1734-RTB removable terminal block and 1734-MB mounting base.
- 1734-TOP or 1734-TOPS POINT I/O one-piece terminal base.

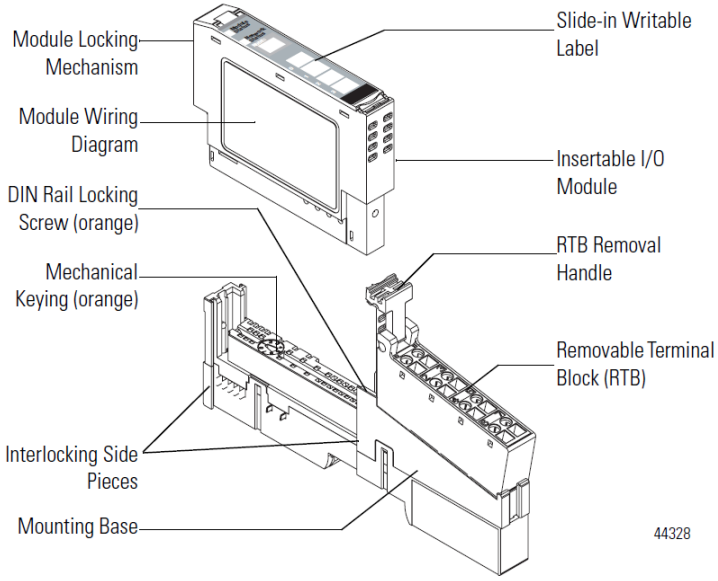

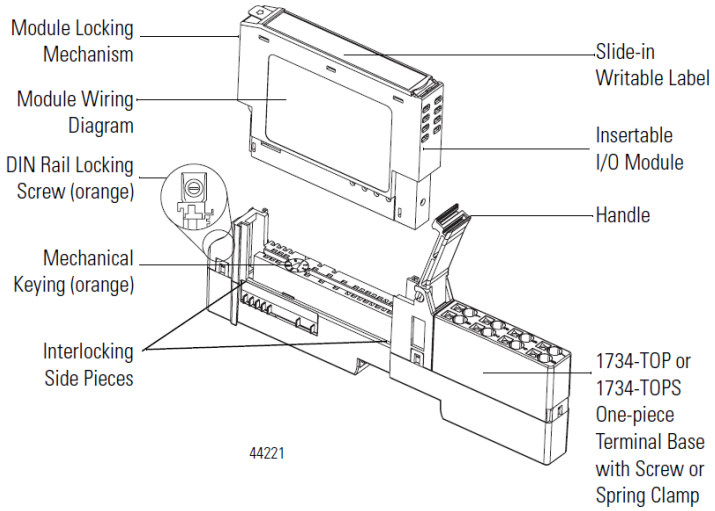

2.4.2 Install Mounting Base

WARNING	During panel or DIN rail mounting of all devices, be sure that all debris (metal chips, wire strands, etc.) is kept from falling into the module. Debris that falls into the module could cause damage when power is applied to the module.

To install the mounting base on the DIN rail, proceed as follows:

1. Position the mounting base vertically above the installed units (adapter, power supply or existing module).
2. Slide the mounting base down, allowing the interlocking side pieces to engage the adjacent module or adapter.
3. Press firmly to seat the mounting base on the DIN rail. The mounting base will snap into place.
4. To remove the mounting base from the DIN rail, remove the module, and use a small-bladed screwdriver to rotate the base locking screw to a vertical position. This releases the locking mechanism. Then lift straight up to remove.

2.4.3 Install the I/O Module

The module can be installed before, or after base installation. Make sure that the mounting base is correctly keyed before installing the module into the mounting base. In addition, make sure the mounting base locking screw is positioned horizontal referenced to the base:

1734-TB Base

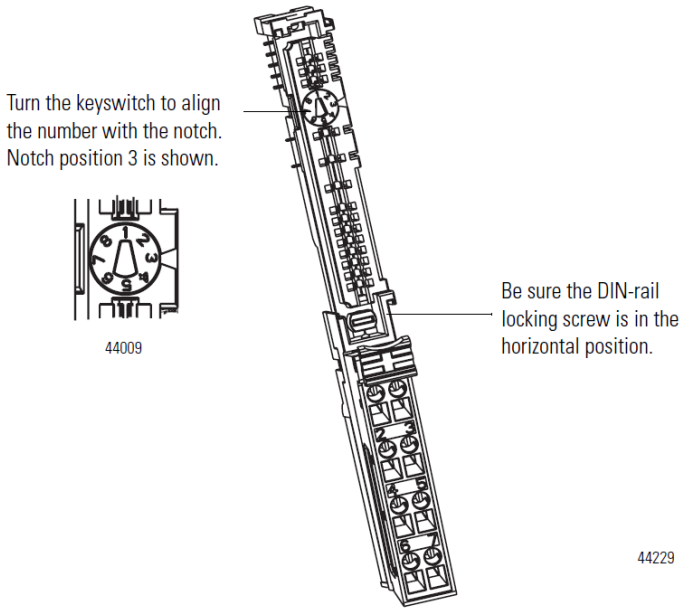

1734-TOP Base

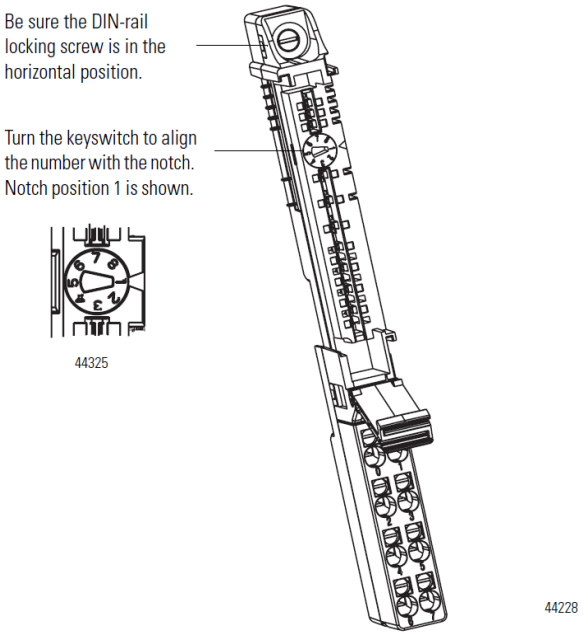

1. Using a bladed screwdriver, rotate the key switch on the mounting base clockwise until the number required for the type of module being installed aligns with the notch in the base.
2. Make certain the DIN rail locking screw is in the horizontal position. (You cannot insert the module if the locking mechanism is unlocked.)
3. Insert the module straight down into the mounting base and press to secure. The module will lock into place.

2.4.4 Install the Removable Terminal Block (RTB)

A removable terminal block is supplied with your wiring base assembly. To remove the terminal block, pull up on the RTB handle. This allows the mounting base to be removed and replaced as necessary without removing any of the wiring. To reinsert the removable terminal block:

1. Insert the end opposite the handle into the base unit. This end has a curved section that engages with the wiring base.
2. Rotate the terminal block into the wiring base until it locks itself in place.
3. If an I/O module is installed, snap the RTB handle into place on the module.

2.4.5 Remove a Mounting Base

To remove a mounting base, you must remove any installed module, and the module installed in the base to the right. Remove the removable terminal block (if wired):

1. Unlatch the RTB handle on the I/O module.
2. Pull on the RTB handle to remove the removable terminal block.
3. Press on the module lock on the top of the module.
4. Pull on the I/O module to remove from the base.
5. Repeat steps 1, 2, 3, and 4 for the module to the right.
6. Use a small-bladed screwdriver to rotate the orange base locking screw to a vertical position.

   This releases the locking mechanism.
7. Lift straight up to remove.

2.4.6 Install a 1734-TOPS Base

1. Position the base vertically above the installed units, such as an adapter, power supply, or existing module.
2. Slide the base down, allowing the interlocking side pieces to engage the adjacent installed unit.
3. Press firmly to seat the base on the DIN rail until the base snaps into place.
4. Verify that the DIN-rail locking screw is in a horizontal, locked position before inserting an I/O module.

2.4.7 Remove a 1734-TOPS Base

To remove a wiring base from the DIN rail, you must remove the module installed to the right of the base:

1. Squeeze the module locking mechanism of the module to the right of the base, pulling up to remove the module.
2. Turn the orange locking screw to a vertical position to unlock the base from the DIN rail.
3. Slide the base up to release it from its mating units.

Section 2.5 Field Wiring Connections

Consider the following when wiring your system:

General

- Power and input wiring must be in accordance with Class 1, Division 2 wiring methods, Article 501-4(b) of the National Electric Code, NFPA 70, and in accordance with the authority having jurisdiction.
- Use Belden™ 8761, or equivalent, shielded wire.
- To ensure optimum accuracy, limit overall cable impedance by keeping a cable as short as possible. Locate the module as close to input devices as the application permits.
- Digital and analog power must be supplied by an Isolated Secondary Limited Energy Low Voltage source.

Grounding

WARNING	USE SUPPLY WIRES SUITABLE FOR 20 °C ABOVE SURROUNDING AMBIENT TEMPERATURE.

WARNING	UTILISER DES FILS D'ALIMENTATION QUI CONVIENNENT A UNE TEMPERATURE DE 20 °C AU-DESSUS DE LA TEMPERATURE AMBIANTE.

- This product is intended to be mounted to a well-grounded mounting surface such as a metal panel. Additional grounding connections from the module's mounting tabs or DIN rail (if used) are not required unless the mounting surface cannot be grounded.
- Under normal conditions, the drain wire (shield) should be connected to the metal mounting panel (earth ground). Keep shield connection to earth ground as short as possible.
- Ground the shield drain wire at one end only. The typical location is as follows:
  - For grounded thermocouples or millivolt sensors, this is at the sensor end.
  - For insulated/ungrounded thermocouples, this is at the module end. Contact your sensor manufacturer for additional details.
- Refer to Industrial Automation Wiring and Grounding Guidelines, Allen-Bradley publication 1770-4.1, for additional information.

Noise Prevention

- Route field wiring away from any other wiring and as far as possible from sources of electrical noise, such as motors, transformers, contactors, and AC devices. As a general rule, allow at least 15.2 cm (6 in.) of separation for every 120 V of power.
- Routing field wiring in a grounded conduit can reduce electrical noise.
- If field wiring must cross AC or power cables, ensure that they cross at right angles.
- If noise persists for a device, try grounding the opposite end of the cable shield or ground both ends of the shield.

2.5.1 Wiring Diagram

Refer to the following wiring diagrams for field wiring connections.

Table 2-1. Terminal Block Pinout

RTB Pin#	Usage	Usage	RTB Pin#
0	Ch 0+ (Input 0)	Ch 2+ (Input 1)	1
2	Ch 0- (Input 2)	Ch 2- (Input 3)	3
4	Ch 1+ (Input 4)	Ch 3+ (Input 5)	5
6	Ch 1- (Input 6)	Ch 3- (Input 7)	7

Figure 2-1. Voltage, Current, and Thermocouple

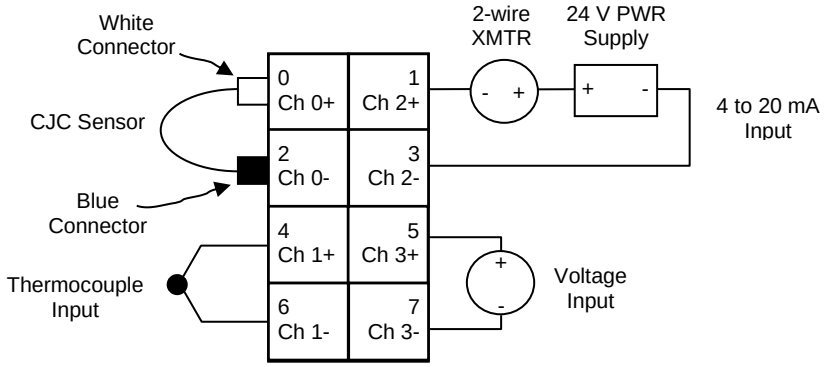

NOTE	The CJC sensor shown in the diagram above can only be installed across terminals 0 and 2.

Figure 2-2. Three- and Four-Wire RTD

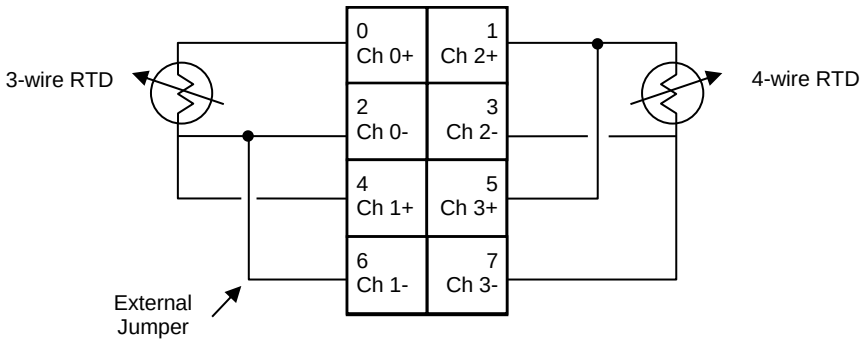

When measuring a 3-wire RTD, you **must** make an electrical short at the terminal block as shown below (see external jumper connection above):

RTD	Drive	RTN	Sense+	Short the following terminals for Sense-
RTD1	0	2	4	2 to 6
RTD2	1	3	5	3 to 7

Figure 2-3. 2-Wire RTD and Resistance

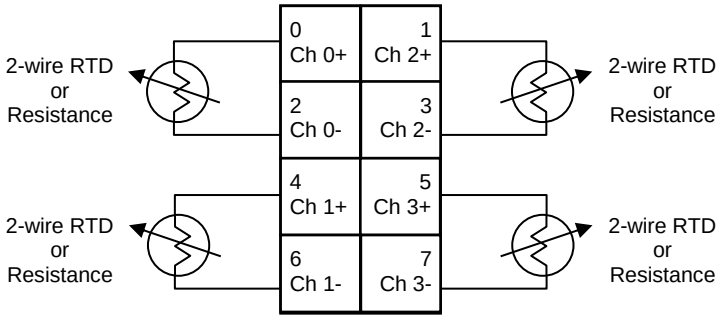

NOTE	Note: The IF4U-1 supports several input types and can be configured for one of the following input combinations. Each combination is listed out separately in the following section: • 4-Channels Voltage + mV + Current • 3-Channels Thermocouple • 2-Channels 3/4-Wire RTD • 4-Channels 2-Wire RTD/Resistance • Or a combination of two or more input types listed above (for example, 1 Channel of Thermocouple and 1 Channel of 3/4-wire RTD).

2.5.2 System Wiring Configurations

The following table and configuration drawings show you the different wiring configurations supported by connections to the terminal block. The 3-wire RTD configurations require you to install an external jumper:

Table 2-2. System Configuration

Configuration	Voltage or Current (V/I)	Thermocouple (TC)	RTD/Resistance (3 and 4-wire)	CJC(s)
1	0	0	2	0
2	2	0	1	0
3	0	1	1	1
4	2	1	0	1
5	1	2	0	1
6	0	3[4]	0	1
7	4[5]	0	0	0

Figure 2-4. System Configuration 1 (4-Wire)

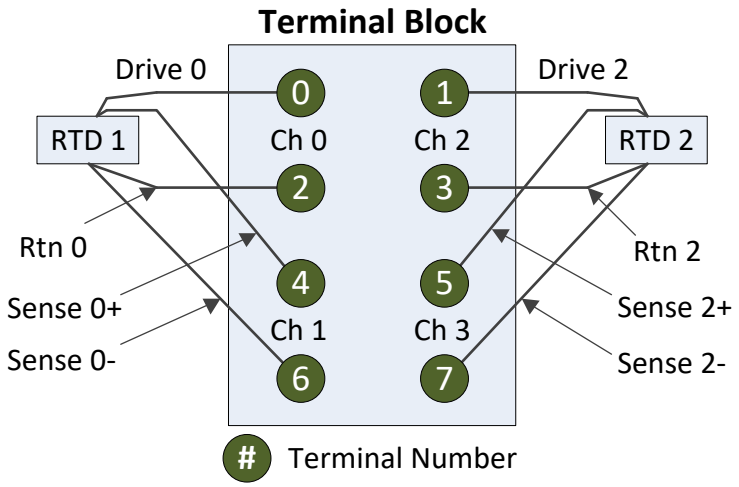

[4] Optional configuration
[5] Optional configuration

Figure 2-5. System Configuration 2 (3-Wire)

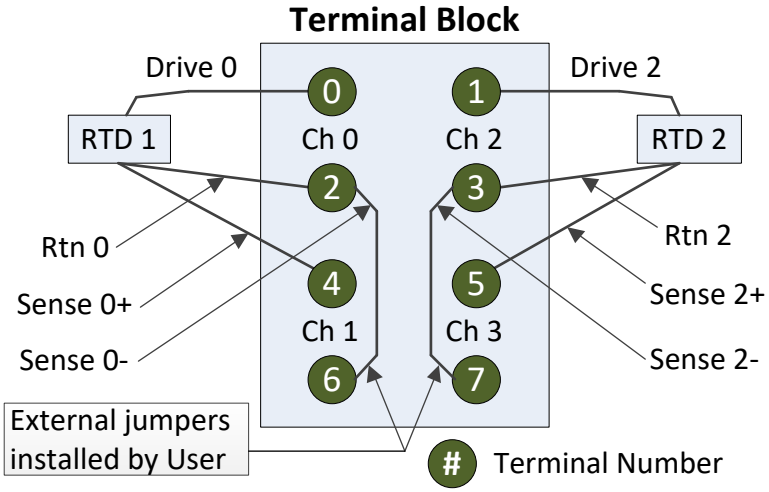

Figure 2-6. System Configuration 3 (3-Wire and 4-Wire are Interchangeable)

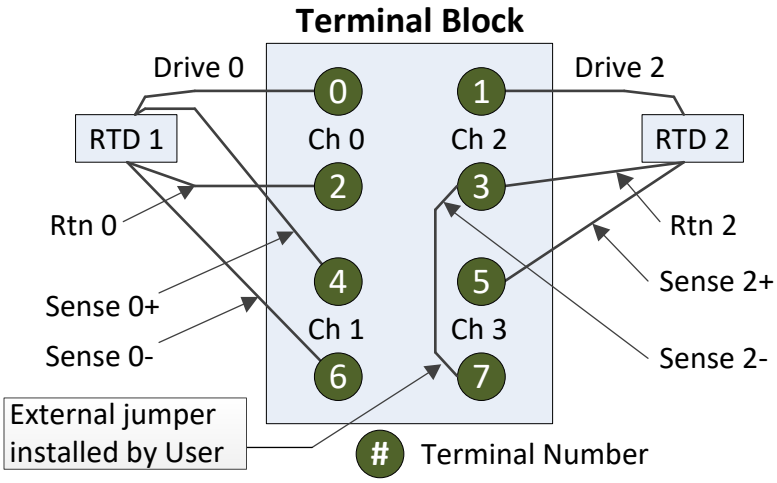

Figure 2-7. System Configuration 4 (3-Wire and 4-Wire are Interchangeable)

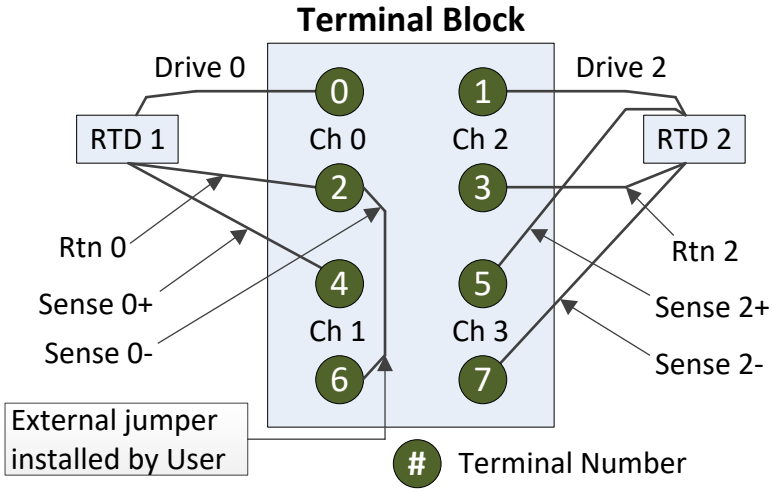

Figure 2-8. System Configuration 5 (4-Wire RTD with Current or Voltage)

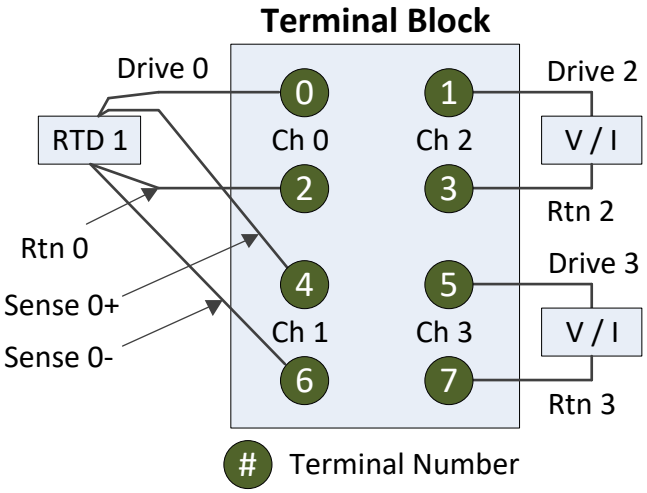

Figure 2-9. System Configuration 6 (3-Wire RTD with Current or Voltage)

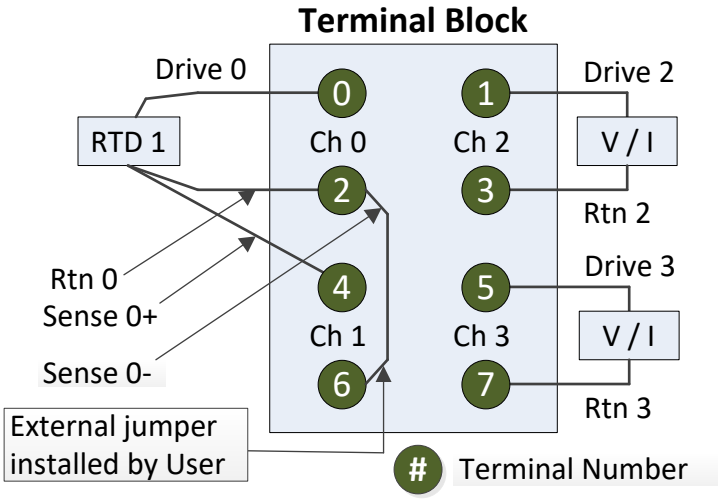

Figure 2-10. System Configuration 7 (4-Wire RTD with Thermocouple)

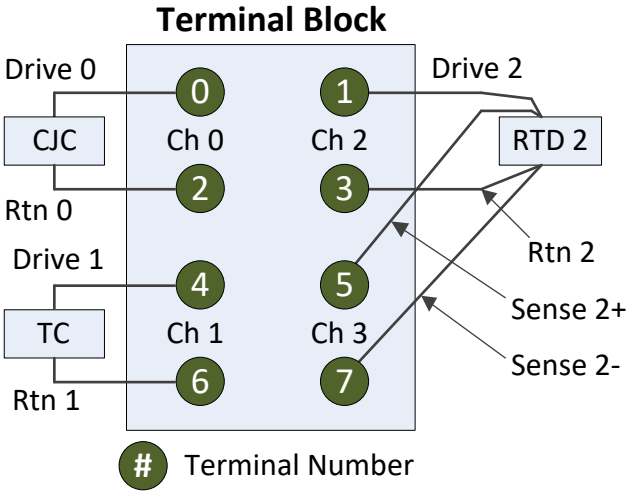

Figure 2-11. System Configuration 8 (3-Wire RTD with Thermocouple)

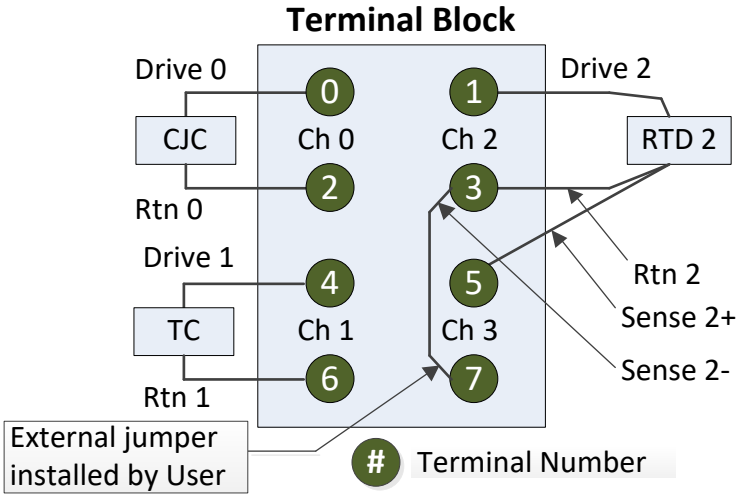

Figure 2-12. System Configuration 9 Thermocouple with Voltage or Current

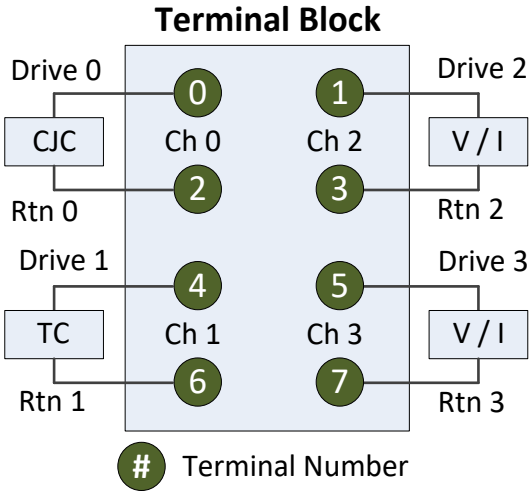

Figure 2-13. System Configuration 10 Thermocouple with Voltage or Current

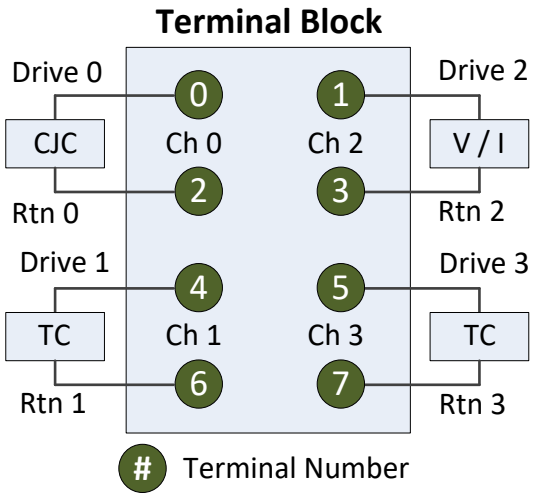

Figure 2-14. System Configuration 11 All Thermocouples

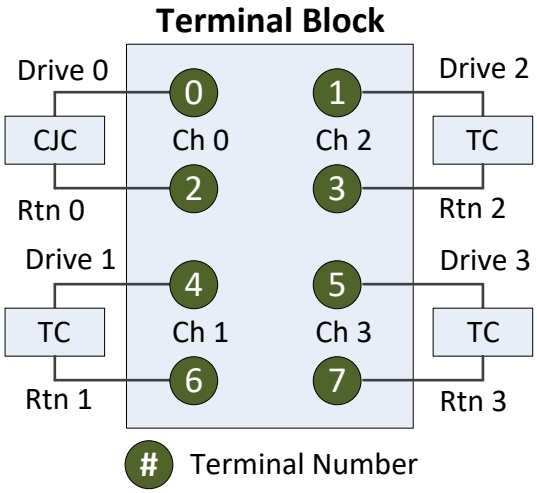

Figure 2-15. System Configuration 12 All Current or Voltage

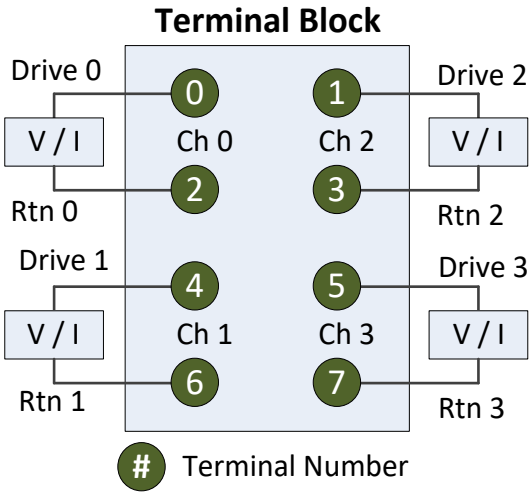

Chapter 3
Configuring the 1734sc-IF4U-1 Using RSLogix 5000

This chapter covers the following subjects:

- Introduction
- About Communications
- Using Generic Profile
- Using Add-On Profile (AOP)
- Module Configuration
- Reading Input Data
- Getting Technical Assistance
- Declaration of Conformity

Section 3.1 Introduction

This chapter will describe how to configure the IF4U-1 module using RSLogix 5000 programming software.

Section 3.2 About Communications

The module produces and consumes data as follows:

IF4U-1 Produce/Consume Data

Instance:			**Description:**						**Total Size:**							
100			**Analog Only**						**16 Bytes RSL 5K (DNet 12 bytes)**							
Bit	**15**	**14**	**13**	**12**	**11**	**10**	**09**	**08**	**07**	**06**	**05**	**04**	**03**	**02**	**01**	**00**
Analog data 12 bytes 0×00 - 0×0B	Channel 0 Data - INT															
	Channel 1 Data - INT															
	Channel 2 Data - INT															
	Channel 3 Data - INT															
	Status Byte for Channel 1								Status Byte for Channel 0							
	n/a	n/a	n/a	OC	OR	UR	n/a	CF	n/a	n/a	n/a	OC	OR	UR	n/a	CF
	Status Byte for Channel 3								Status Byte for Channel 2							
	n/a	n/a	n/a	OC	OR	UR	n/a	CF	n/a	n/a	n/a	OC	OR	UR	n/a	CF

WARNING	The IF4U-1 module is not compatible with the 1734-ADN, ADN(X), and PDN device net adapters, and the 1734-APB PROFIBUS adapter.

WARNING	The 1734sc-IF4U-1 is not field upgradable.

WARNING	The ControlNet adapter (1734-ACNR) has a maximum data transmit limit of 600 bytes. Therefore, the maximum number of 1734sc-IF4U-1 modules that can be installed behind a ControlNet adapter is 14. The maximum number of modules that can be installed behind an EtherNet adapter (1734-AENT) is 19.

Section 3.3 Use Generic Profile

The generic point IO module profile can be used to represent the IF4U-1 module within RSLogix 5000. The generic profile should be used for RSLogix 5000 versions 14 and older. Before the generic profile can be added to the IO configuration, the proper communication module needs to be added to the IO configuration first. To add a communication module to RSLogix 5000:

1. Add the new local communication module to your project.
2. Configure the local module, including:
   a. Naming the module.
   b. Choosing a Communication Format.
   c. Setting the Revision level.
   d. Setting the module location as necessary such as the slot number for a 1756-CNB module.
   e. Choosing an Electronic Keying method.
3. Add the new remote module to your project, such as a 1734 Control Net adapter or Ethernet Adapter (that is, 1734-ACNR or 1734-AENT, respectively).
4. Configure the remote module similarly to the local module.
5. Download the configuration to the controller.

NOTE	If you are using Control Net, you must schedule the network using RSNetworks for Control Net after adding the local and remote communication modules.

NOTE	When you create a new RSLogix 5000 project with the CompactLogix 1769-L32C or L35CR controller, the Controller Organizer creates a Control Net port in the local chassis. In this case, you do not need to add a separate, local communication module.

NOTE	When you create a new RSLogix 5000 project with the CompactLogix 1769-L23E, 1769-L32E or L35E controller, The Controller Organizer creates an Ethernet port in the local chassis. In this case, you do not need to add a separate, local communication module.

3.3.1 Add a Local Ethernet Bridge Module

After you have started RSLogix 5000 software and created a controller project, you can add Ethernet communication modules. A local Ethernet communication module is a module that resides in the same chassis as the controller.

1. Select a **New Module** for the I/O Configuration.

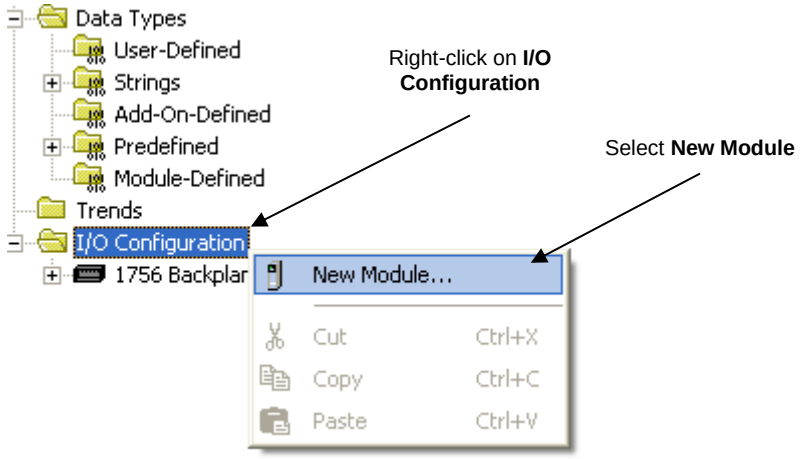

2. Select the module type from the **Select Module** type pop-up.

The example below uses a 1756-ENBT module:

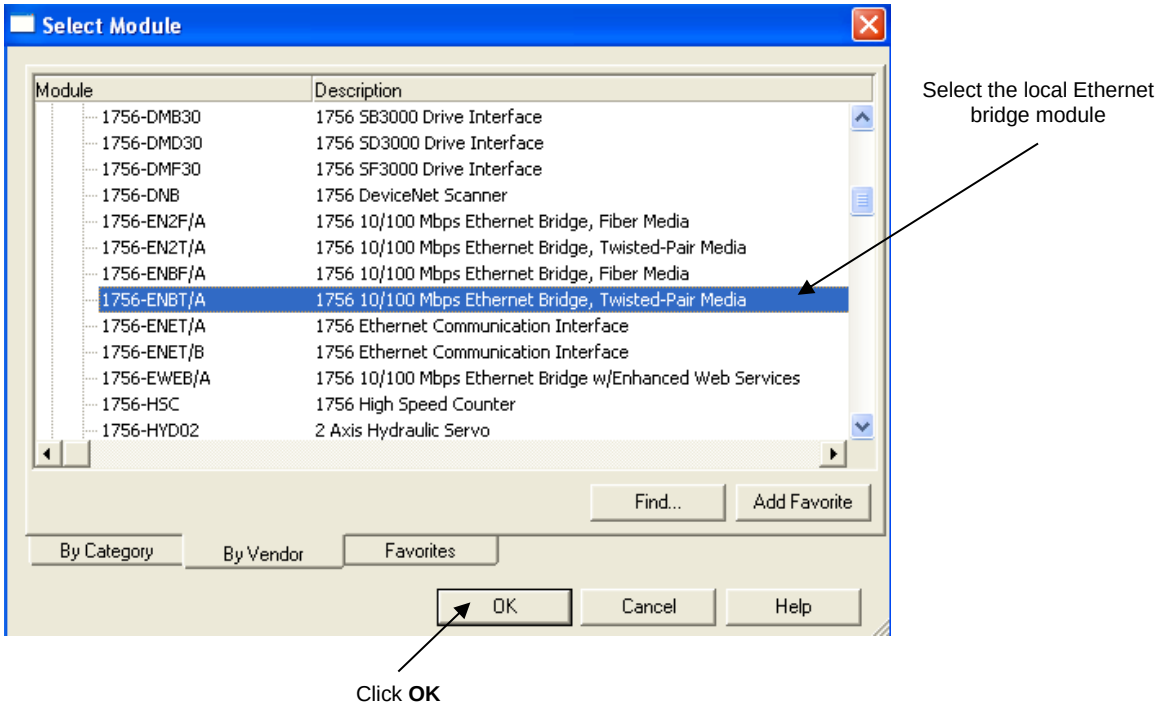

3. Configure the local Ethernet bridge module:

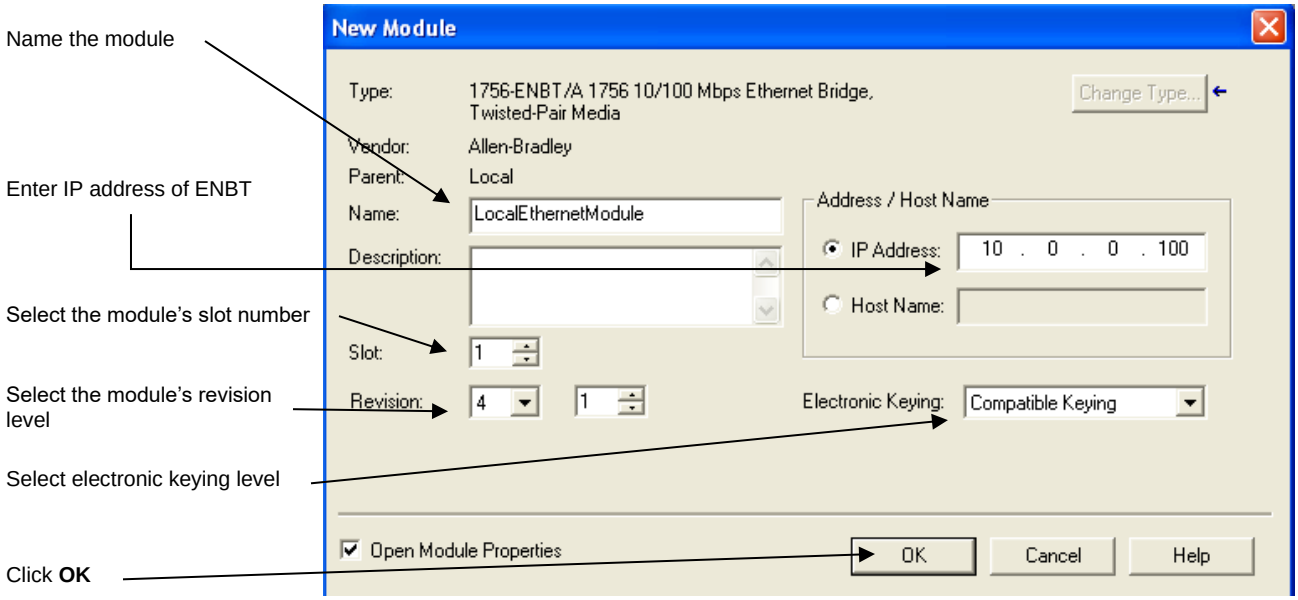

3.3.2 Add a Remote Ethernet Point IO Adapter

After you have added the local Ethernet communication module, you must add remote Ethernet communication modules. A remote Ethernet module is a module that resides in a separate chassis from the controller.

NOTE	If you plan to use the 1734 Control Net adapter, you will need to install the 1734sc-IF4U EDS file (same as used with the IF4U) before scheduling the network. The latest EDS files can be found at (www.spectrumcontrols.com).

1. Select a **New Module** for the I/O Configuration:

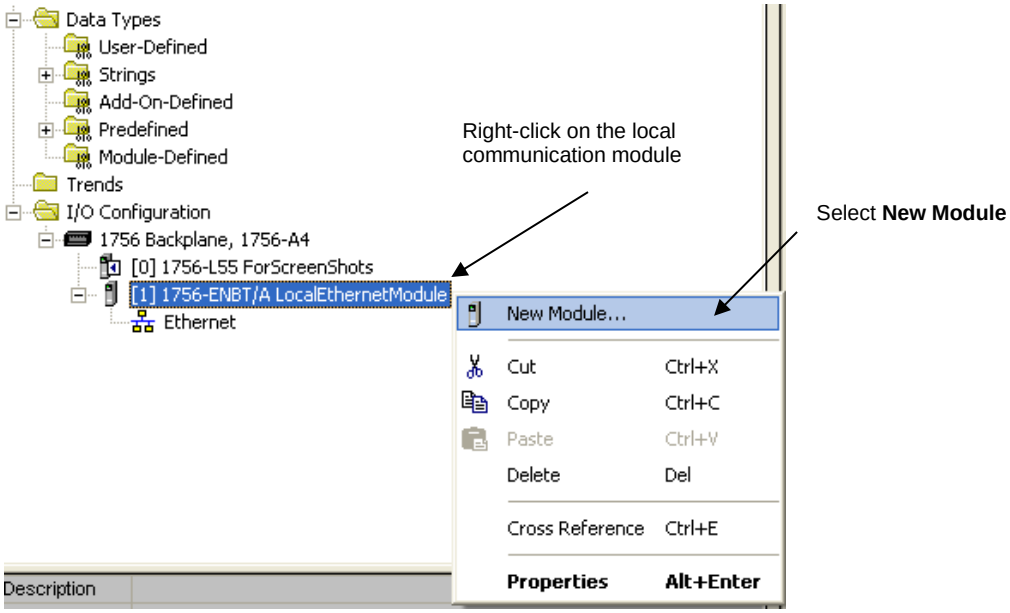

2. Select the module type from the **Select Module** type pop-up:

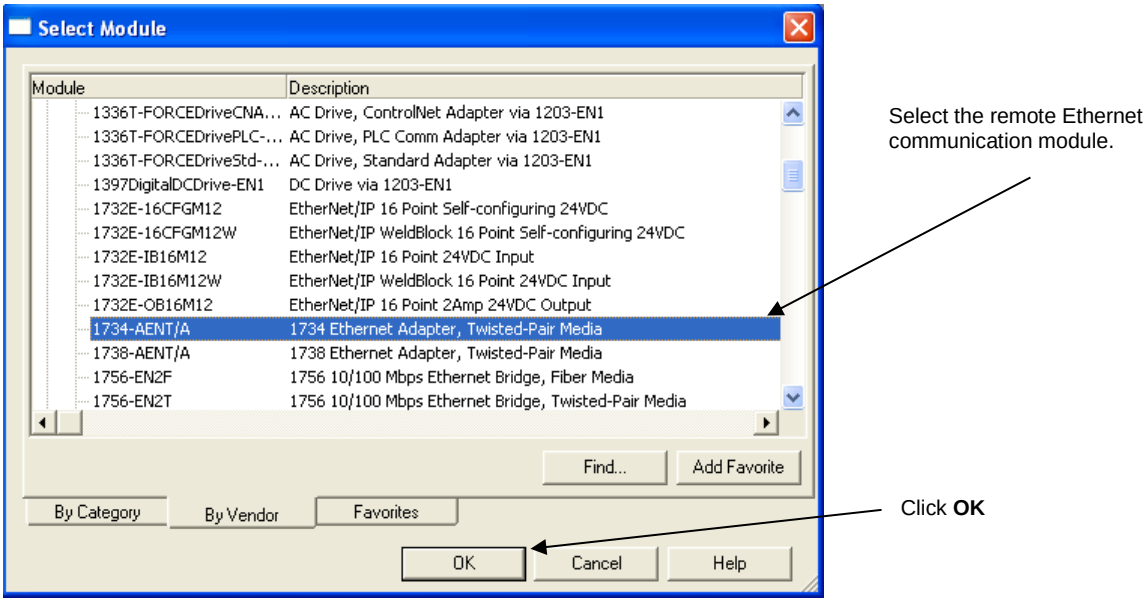

3. Configure the remote Ethernet communication module:

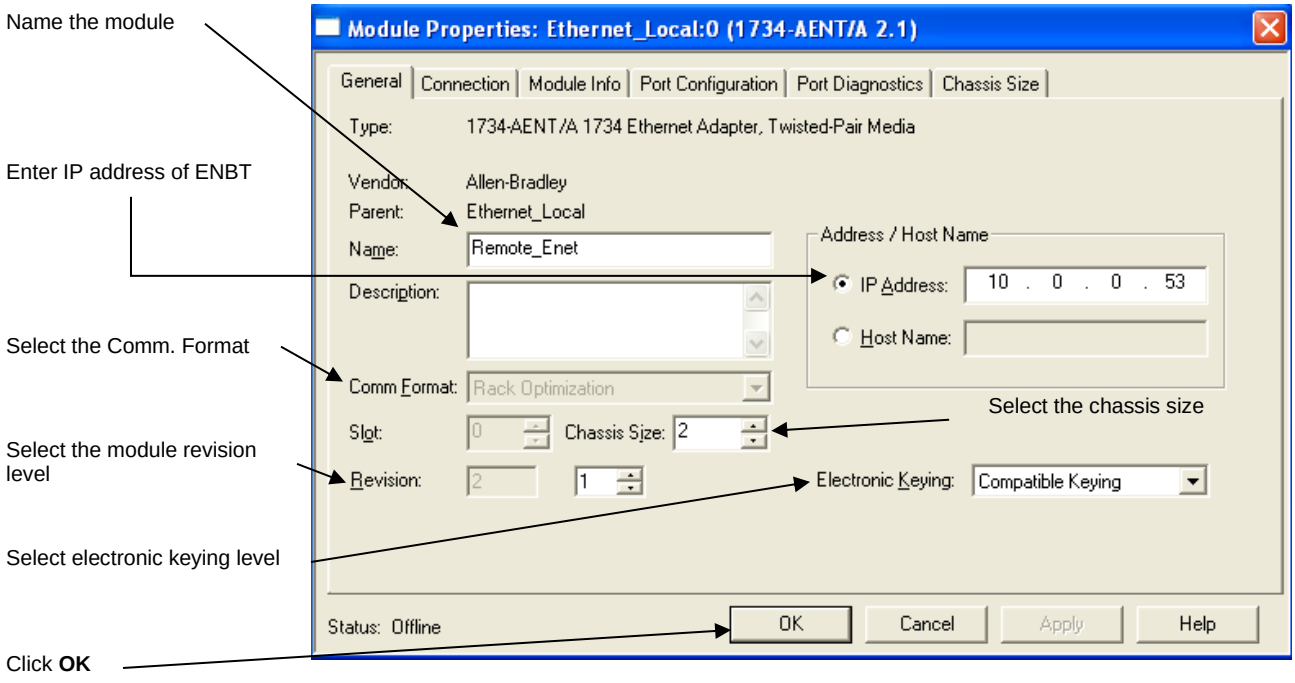

3.3.3 Add the Generic Point IO Module

After adding the remote Ethernet communication module, the 1734 Generic Module must be added. The following steps must be followed to add the 1734 Generic IO Module:

1. Select a **New Module** for the I/O Configuration:

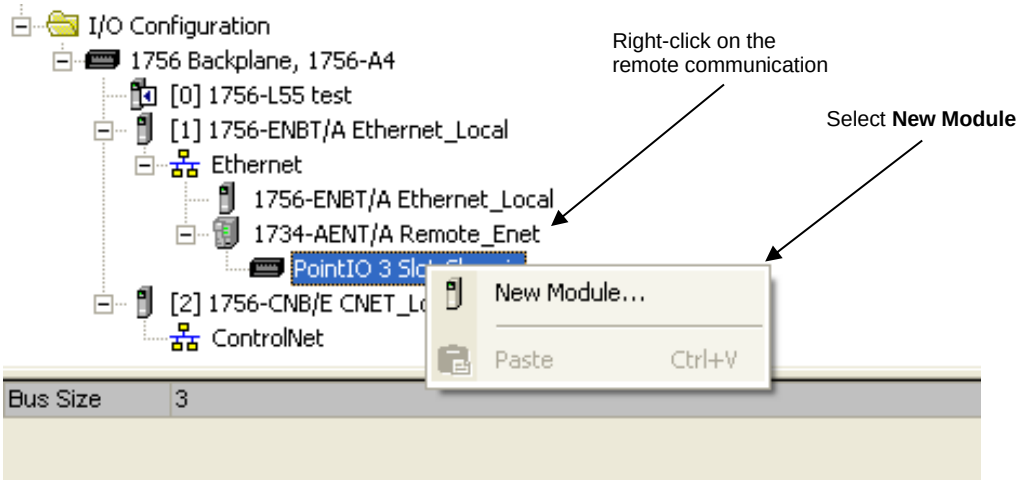

2. Select the module type from the **Select Module** type pop-up:

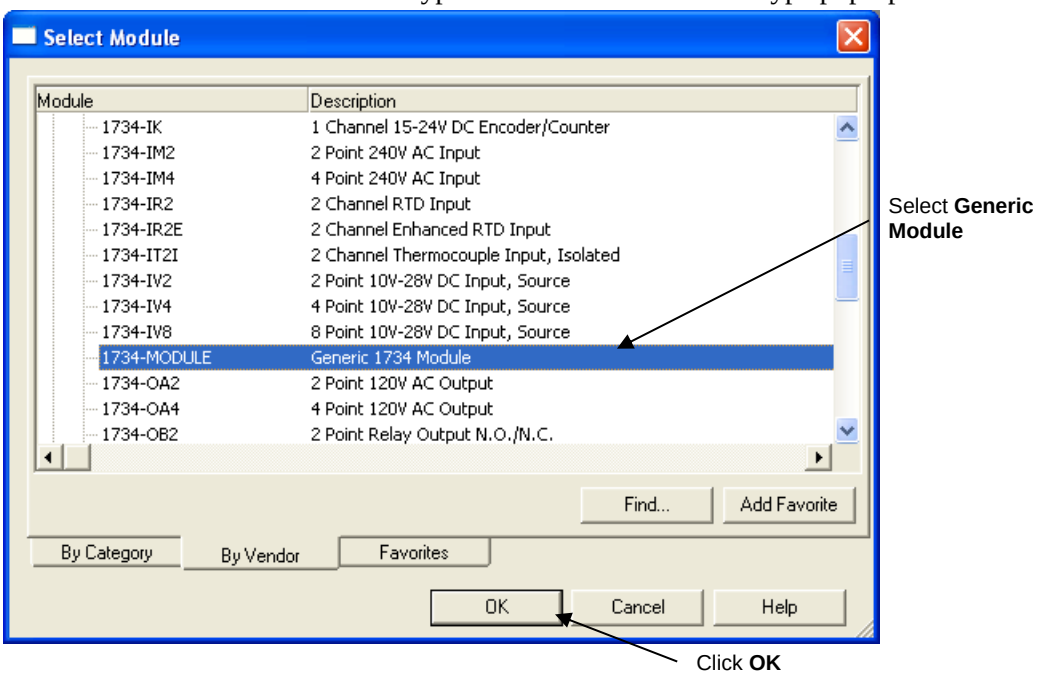

3. Configure the Generic 1734 Module (that is, 1734sc-IF4U-1):

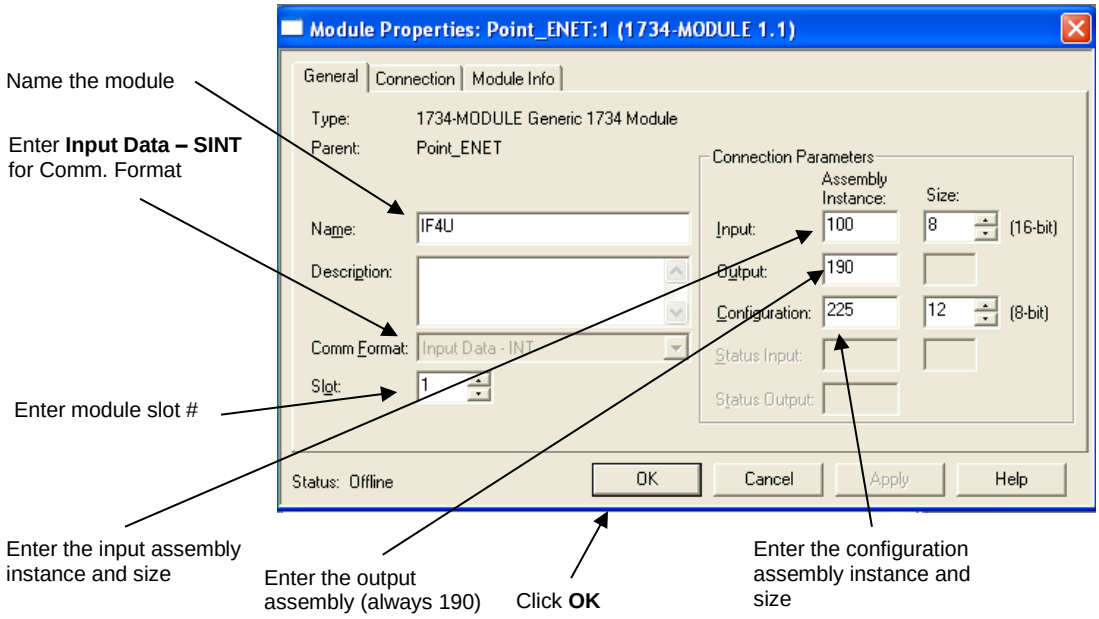

Section 3.4 Use Add-On-Profile

For RSLogix 5000 version 15 and greater, an Add-On module profile is available for download at (www.spectrumcontrols.com). The Add-On profile allows the user to add the IF4U-1 module to the RSLogix 5000 module pick list. The profile provides configuration and information screens to the user to simplify installation. Follow the procedure below to install and use the Add-On profile.

3.4.1 Installing the Add-On Profile

1. Download the zipped file from the Spectrum Controls website and unzip the file (www.spectrumcontrols.com).
2. Open the created folder and double-click on the MPSetup.exe file.

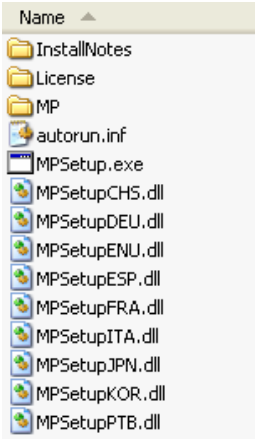

3. Follow the online prompts.

3.4.2 Adding the IF4U-1 Module to Your Logix Project

Once the profiles are installed, you can access them through RSLogix 5000 via the I/O Configuration. Follow the procedure below to add a module:

1. Before you can add the 1734sc-IF4U-1 to your RSLogix 5000 project, you must first add a local communication module and a remote communication adapter. Complete sections 3.3.1 and the relevant listed steps above, before proceeding to step 2 below.
2. In the I/O Configuration, right mouse click on the Point IO backplane under the remote communication adapter that you added in step 1 above and select **New Module**.

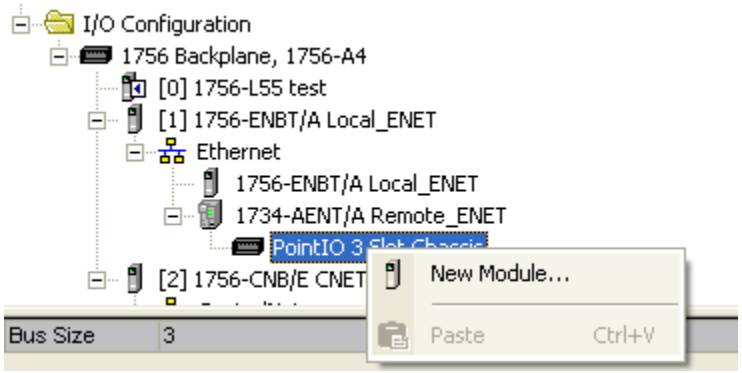

3. When the dialog screen opens, select the **By Vendor** tab and expand the Spectrum Controls folder:

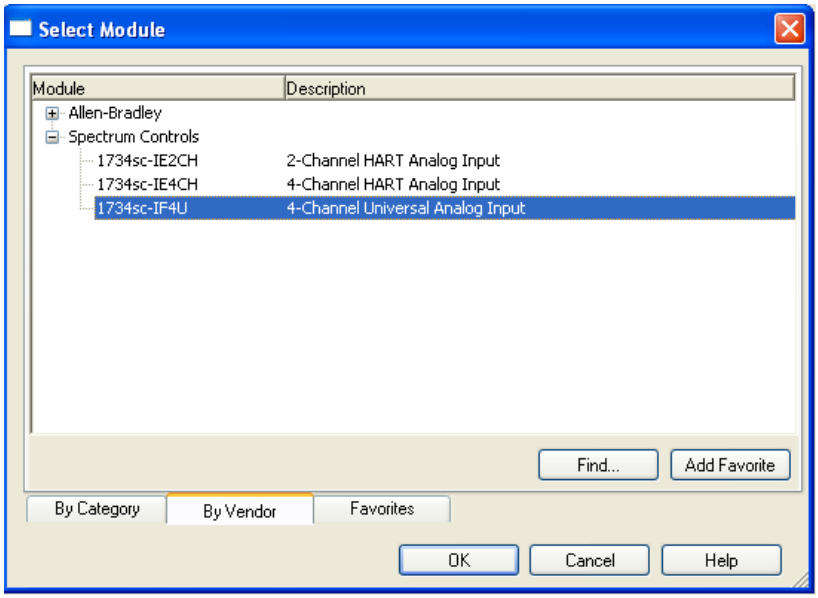

4. Highlight the module and press the **OK** button.

5. Give the module a unique name:

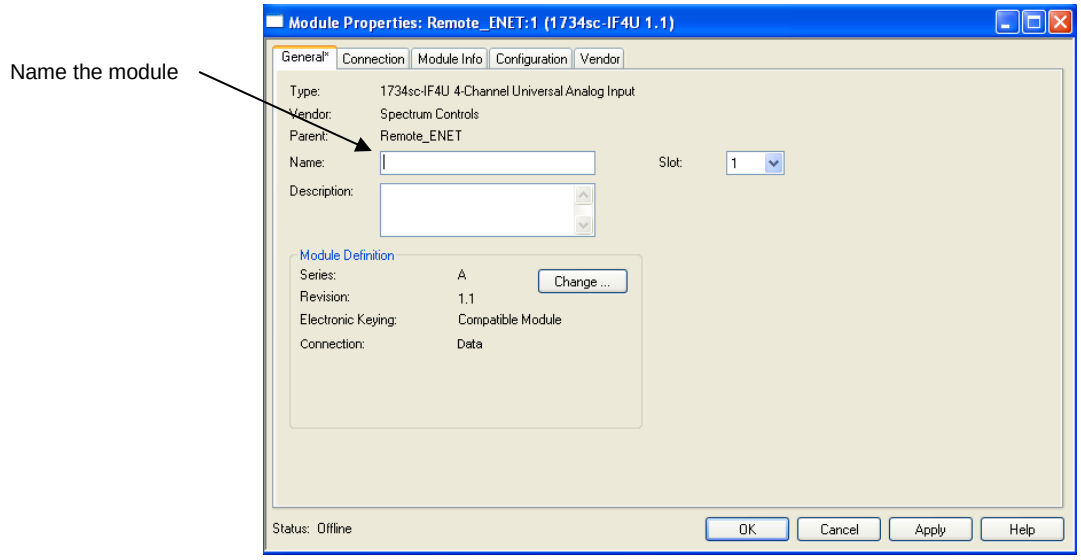

6. Enter an RPI Rate:

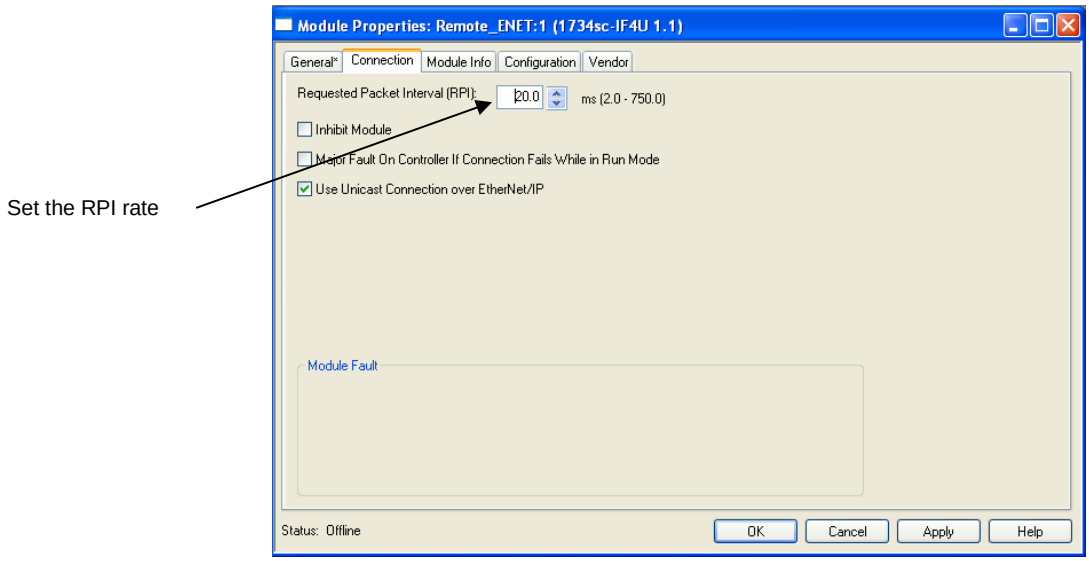

7. Configure the rest of the module using the **Module Configuration** tab.

Section 3.5 Module Configuration

The IF4U-1 can be configured using the same AOP as the IF4U, or by using the 1734 generic module profile. The configuration tags for the IF4U-1 are located under the controller tags. The following examples describe the tag structure allocated by the Generic Module profile and the AOP.

Generic Module Profile:
[Name of remote communication module]:e:x.Data[0 to 198]

e = IF4U-1 slot number
x = Image Type (i.e. C, I, or O)

AOP (Add-On-Profile):
[Name of remote communication module]:e:x
e = IF4U-1 slot number
x = Image Type (i.e. C, I, or O)

NOTE	The AOP will provide a predefined tag structure for the configuration. See example below.

Figure 3-1. AOP Config. Tags

Remote_ENET:1:C	{...}
Remote_ENET:1:C.Ch0Config	2#0000_0000_0000_0000
Remote_ENET:1:C.Ch0Disable	0
Remote_ENET:1:C.Ch0Filter_1	0
Remote_ENET:1:C.Ch0Filter_2	0
Remote_ENET:1:C.Ch0OpenWire_4	0
Remote_ENET:1:C.Ch0OpenWire_5	0
Remote_ENET:1:C.Ch0InputType_6	0
Remote_ENET:1:C.Ch0InputType_7	0
Remote_ENET:1:C.Ch0InputType_8	0
Remote_ENET:1:C.Ch0InputType_9	0
Remote_ENET:1:C.Ch0InputType_10	0
Remote_ENET:1:C.Ch0DataFormat_11	0
Remote_ENET:1:C.Ch0DataFormat_12	0
Remote_ENET:1:C.Ch0WireRTD_13	0
Remote_ENET:1:C.Ch0WireRTD_14	0
Remote_ENET:1:C.Ch0TempMode	0

Table 3-1. IF4U-1 Configuration Assembly

Instance: **225 (0×E1)**	**Size:** **12 bytes RSL 5K (DNET 8 bytes)**		
OFFSET	**FIELD**	**TYPE**	**BYTES**
0×00	Channel 0 Configuration (See Channel Configuration Details below)	INT	2
0×02	Channel 1 Configuration (Same as above)	INT	2
0×04	Channel 2 Configuration (Same as above)	INT	2
0×06	Channel 3 Configuration (Same as above)	INT	2

3.5.1 Channel Configuration Details

To Select		Make these bit settings															
		15	**14**	**13**	**12**	**11**	**10**	**09**	**08**	**07**	**06**	**05**	**04**	**03**	**02**	**01**	**00**
Channel Enable	Enable (Default)																**0**
	Disable																1
Filter Frequency (Ignored if Display CJC)	17 Hz (Default)														**0**	**0**	
	4 Hz														0	1	
	62 Hz														1	0	
	470 Hz														1	1	
CJC Disable	Enable (Default)													**0**			
	Disable													1			
Open Circuit (Ignored if Display CJC)	Upscale (Default)											**0**	**0**				
	Downscale											0	1				
	Zero											1	0				
	N/A											1	1				
Input Type	-9 to 9 V (Default)						**0**	**0**	**0**	**0**	**0**						
	0 to 9 V						0	0	0	0	1						
	1 to 5 V						0	0	0	1	0						
	0 to 5 V						0	0	0	1	1						
	±1 V						0	0	1	0	0						
	±100 mV						0	0	1	0	1						
	±50 mV						0	0	1	1	0						
	4 to 20 mA						0	0	1	1	1						
	0 to 20 mA						0	1	0	0	0						
	Type J TC						0	1	0	0	1						
	Type K TC						0	1	0	1	0						
	Type T TC						0	1	0	1	1						
	Type E TC						0	1	1	0	0						
	100 Pt 385						0	1	1	0	1						
	1000 Pt 385						0	1	1	1	0						
	100 Pt 3916						0	1	1	1	1						
	1000 Pt 3916						1	0	0	0	0						
	3000 ohms						1	0	0	0	1						
	CJC						1	0	0	1	0						
Data Format	Eng. Units ×1 (Default)				**0**	**0**											
	Eng. Units ×10				0	1											
	Raw/Proportional Data				1	0											
	Scaled for PID				1	1											
2/3/4 Wire RTD (Only valid for RTD/R ranges)	3 Wire w/ Comp (Default)		**0**	**0**													
	4 Wire		0	1													
	2 Wire		1	0													
Temperature Scale (Only valid for temperature ranges)	Degrees C (Default)	**0**															
	Degrees F	1															

Channel Disable (Bit 0)

Enable (Default) = 0, Disable = 1. If the channel is disabled, all other fields are

ignored.

Filter Frequency (Bits 1 and 2)

The filter selection affects how the module attenuates the input signal at the specified frequency. It also affects the update time of the input data which is reflected in the minimum conversion time for each channel. Lower filter frequencies are recommended for RTD and Thermocouple modes. The total update time for the module can be calculated using the table below. Default setting is 17 Hz.

Table 3-2. Channel Conversion Time

ADC Filter Name (Update Frequency)	Conversion Time	Step Response/Module update Rate[6]
470 Hz	37 ms	= Sum of conversion times for each enabled channel
62 Hz	65 ms	
17 Hz	153 ms	
4 Hz	512 ms	

Example:

Channels 0/1 are configured for 3-wire RTD and 4 Hz filter:

Channel 2 is configured for 17 Hz voltage.

Channel 3 is configured for 62 Hz current.

The RTD channel pair has a conversion time of 1024 ms (512*2).

The module scan time will be 1024+153+62 = 1239 ms

3.5.2 RTD Accuracy

The RTD Algorithms used have a curve-fit accuracy that is generally within two to three decimal places of a degree C across the span of measured resistance ranges. This conversion accuracy has little effect on the final result. RTD conversion is therefore heavily dependent on its ability to accurately measure resistance.

CJC Disable (Bit 3)

When this bit is set, no CJC compensation is applied to the channel if it is configured as a thermocouple. Default setting is **enabled**.

Open Circuit Response (Bits 4 and 5)

The open circuit response defines the state of the channel data when an open-circuit or short-circuit condition is detected. Default setting is upscale.

[6] The module update time is purely the sum of the conversion times for each enabled channel except when a channel is configured for a 3-wire RTD. For each channel configured for a 3-wire RTD, double the conversion time.

Response Option	Definition
Upscale	Sets the input data value to full-scale value. The full-scale value is determined by the selected input type and data format.
Downscale	Sets the input data value to minimum-scale value. The minimum-scale value is determined by the selected input type and data format.
Zero	Sets the input data value to zero (0).

Input Type (Bits 6 through 10)

These bits specify the input type for each channel. If channel 0 or 2 is configured for multi-wire RTD or resistance, the configuration for the adjacent odd channel (1, 3) is ignored. It is recommended to configure both channels identically (0 and 1, 2, and 3) when using multi-wire RTD. This reduces confusion in the setup. A zero will be reported for the adjacent odd channel in multi-wire RTD. The ±9 V range is the default input type for each IF4U-1 channel.

Data Format (Bits 11 and 12)

Data Format dictates how the data is presented. Engineering Units ×1 is the default.

Table 3-3. Data Formats

Input Range	Input Value	Condition	EU ×1	EU ×10	Raw Prop	PID
E Type TC	1000.00 °C	High Limit	10000	1000	32767	16383
	1000.00 °C	High Range	10000	1000	32767	16383
	-270.00 °C	Low Range	-2700	-270	-32768	0
	-270.00 °C	Low Limit	-2700	-270	-32768	0
J Type TC	1200.00 °C	High Limit	12000	1200	32767	16383
	1200.00 °C	High Range	12000	1200	32767	16383
	-210.00 °C	Low Range	-2100	-210	-32768	0
	-210.00 °C	Low Limit	-2100	-210	-32768	0
K Type TC	1370.00 °C	High Limit	13700	1370	32767	16383
	1370.00 °C	High Range	13700	1370	32767	16383
	-270.00 °C	Low Range	-2700	-270	-32768	0
	-270.00 °C	Low Limit	-2700	-270	-32768	0
T Type TC	400.00 °C	High Limit	4000	400	32767	16383
	400.00 °C	High Range	4000	400	32767	16383
	-270.00 °C	Low Range	-2700	-270	-32768	0
	-270.00 °C	Low Limit	-2700	-270	-32768	0
RTD 100 Ohm Pt 0.385	850.00 °C	High Limit	8500	850	32767	16383
	850.00 °C	High Range	8500	850	32767	16383
	-200.00 °C	Low Range	-2000	-200	-32768	0
	-200.00 °C	Low Limit	-2000	-200	-32768	0
RTD 1000 Ohm Pt 0.385	850.00 °C	High Limit	8500	850	32767	16383
	850.00 °C	High Range	8500	850	32767	16383
	-200.00 °C	Low Range	-2000	-200	-32768	0

Input Range	Input Value	Condition	EU ×1	EU ×10	Raw Prop	PID
	-200.00 °C	Low Limit	-2000	-200	-32768	0
RTD 100 Ohm Pt 0.392	630.00 °C	High Limit	6300	630	32767	16383
	630.00 °C	High Range	6300	630	32767	16383
	-200.00 °C	Low Range	-2000	-200	-32768	0
	-200.00 °C	Low Limit	-2000	-200	-32768	0
RTD 1000 Ohm Pt 0.392	630.00 °C	High Limit	6300	630	32767	16383
	630.00 °C	High Range	6300	630	32767	16383
	-200.00 °C	Low Range	-2000	-200	-32768	0
	-200.00 °C	Low Limit	-2000	-200	-32768	0
Resistance 0..3000 Ohms	3000.00 ohms	High Limit	30000	3000	32767	16383
	3000.00 ohms	High Range	30000	3000	32767	16383
	0.00 ohms	Low Range	0	0	-32768	0
	0.00 ohms	Low Limit	0	0	-32768	0
±50 mV	52.50 mV	High Limit	5250	525	Clipped	16793
	50.00 mV	High Range	5000	500	32767	16383
	-50.00 mV	Low Range	-5000	-500	-32768	0
	-52.50 mV	Low Limit	-5250	-525	Clipped	-410
±100 mV	105.00 mV	High Limit	10500	1050	Clipped	16793
	100.00 mV	High Range	10000	1000	32767	16383
	-100.00 mV	Low Range	-10000	-1000	-32768	0
	-105.00 mV	Low Limit	-10500	-1050	Clipped	-410
0..5 V	5.25 VDC	High Limit	5250	525	Clipped	17202
	5.00 VDC	High Range	5000	500	32767	16383
	0.00 VDC	Low Range	0	0	-32768	0
	0.00 VDC	Low Limit	0	0	-32768	0
1..5 V	5.25 VDC	High Limit	5250	525	Clipped	17407
	5.00 VDC	High Range	5000	500	32767	16383
	1.00 VDC	Low Range	1000	100	-32768	0
	0.50 VDC	Low Limit	500	50	Clipped	-2048
±9 V	9.25 VDC	High Limit	9250	925	Clipped	16611
	9.00 VDC	High Range	9000	900	32767	16383
	-9.00 VDC	Low Range	-9000	-900	-32768	0
	-9.25 VDC	Low Limit	-9250	-925	Clipped	-410
0..9 V	9.25 VDC	High Limit	9250	925	Clipped	16838
	9.00 VDC	High Range	9000	900	32767	16383
	0.00 VDC	Low Range	0	0	-32768	0
	0.00 VDC	Low Limit	0	0	-32768	0
±1 V	1.05 VDC	High Limit	10500	1050	Clipped	16793
	1.00 VDC	High Range	10000	1000	32767	16383
	-1.00 VDC	Low Range	-10000	-1000	-32768	0
	-1.05 VDC	Low Limit	-10500	-1050	Clipped	-410
4..20 mA	21.00 mA	High Limit	21000	2100	Clipped	17407
	20.00 mA	High Range	20000	2000	32767	16383
	4.00 mA	Low Range	4000	400	-32768	0

Input Range	Input Value	Condition	EU ×1	EU ×10	Raw Prop	PID
	3.00 mA	Low Limit	3000	300	Clipped	-1024
0..20 mA	21.00 mA	High Limit	21000	2100	Clipped	17202
	20.00 mA	High Range	20000	2000	32767	16383
	0.00 mA	Low Range	0	0	-32768	0
	0.00 mA	Low Limit	0	0	-32768	0
CJC	85.00 °C	High Limit	8500	850	Clipped	16383
	85.00 °C	High Range	8500	850	32767	16383
	-25.00 °C	Low Range	-2500	-250	-32768	0
	-25.00 °C	Low Limit	-2500	-250	Clipped	0

2-/-3/4-Wire RTD (Bits 13 and 14): Default: 3-Wire

These bits are used for RTD and Resistance modes only. They are used to specify 2-, 3-, or 4-wire RTD modes. This setting is ignored for non-resistance/RTD input types. Default setting is 3-wire.

Temperature Scale (Bit 15) Default: Celsius

Set to 1 to display degrees Fahrenheit. Otherwise 0 displays temperature in degrees Celsius (default). This field is ignored for non-temperature ranges.

Section 3.6 Read Input Data

The input data file contains module status information and analog input data for each of the input channels. Analog input data is read for each channel, converted to a scaled digital value, and stored in the input tags. The input tags for the IF4U-1 are located under the controller tags. The following examples describe the tag structure allocated by the Generic Module profile and the AOP.

Generic Module Profile:

[Name of remote communication module]:e:x.Data[0 to 198]

e = IF4U-1 slot number

x = Image Type (that is, C, I, or O)

AOP (Add-On-Profile):

[Name of remote communication module]:e:x

e = IF4U-1 slot number

x = Image Type (i.e. C, I, or O)

NOTE	The AOP will provide a predefined tag structure for the configuration. See example below.

Figure 3-2. AOP Input Tags

Remote_ENET:1:I	{...}
Remote_ENET:1:I.FltStatus	2#0000_0000_0000_0000_0000_0000_0000_0000
Remote_ENET:1:I.Ch0Data	16#0000
Remote_ENET:1:I.Ch1Data	16#0000
Remote_ENET:1:I.Ch2Data	16#0000
Remote_ENET:1:I.Ch3Data	16#0000
Remote_ENET:1:I.Ch0Status	2#0000_0000
Remote_ENET:1:I.Ch0_CF	0
Remote_ENET:1:I.Ch0_CM	0
Remote_ENET:1:I.Ch0_UR	0
Remote_ENET:1:I.Ch0_OR	0
Remote_ENET:1:I.Ch0_OC	0

Table 3-4. IF4U-1 Input Assembly

Instance:			**Description:**						**Total Size:**							
100			**Analog Only**						**16 Bytes RSL 5K (DNet 12 bytes)**							
Bit	**15**	**14**	**13**	**12**	**11**	**10**	**09**	**08**	**07**	**06**	**05**	**04**	**03**	**02**	**01**	**00**
Analog data	Channel 0 Data - INT															
12 bytes	Channel 1 Data - INT															
0×00-0×0B	Channel 2 Data - INT															
	Channel 3 Data - INT															
	Status Byte for Channel 1								Status Byte for Channel 0							
	n/a	n/a	n/a	OC	OR	UR	n/a	CF	n/a	n/a	n/a	OC	OR	UR	n/a	CF
	Status Byte for Channel 3								Status Byte for Channel 2							
	n/a	n/a	n/a	OC	OR	UR	n/a	CF	n/a	n/a	n/a	OC	OR	UR	n/a	CF

3.6.1 Input Assembly Status Bit Definitions

Under Range and Over Range trip points are determined by the Low Range and High Range values in Table 3-3.

The CF bit is set when any of the other status bits are set.

CF = Channel Fault status; 0 = no error, 1 = fault

UR = Underrange; 0 = no error, 1 = fault

OR = Overrange; 0 = no error, 1 = fault

OC = Open Circuit: 0 = no error, 1 = fault (not valid for all ranges)

n/a = Always 0.

Getting Technical Assistance

Note that your module contains electrostatic components that are susceptible to damage from electrostatic discharge (ESD). An electrostatic charge can accumulate on the surface of ordinary wrapping or cushioning material. **In the unlikely event that the module should need to be returned to Spectrum Controls Inc., please ensure that the unit is enclosed in approved ESD packaging (such as static-shielding/metallized bag or black conductive container).** Spectrum Controls, Inc. reserves the right to void the warranty on any unit that is improperly packaged for shipment.

RMA (Return Merchandise Authorization) form required for all product returns.

For further information or assistance, please contact your local distributor, or call the technical support number provided under the Technical Support section in the Preface.

Declaration of Conformity

Available upon request

Appendix A
Module Specifications

General Specifications

Parameter	**Specification**
Module location	1734-TB*xx*
POINTBus current	15 mA
Power dissipation	0.6 W maximum at 28.8 VDC
Thermal dissipation	2.0 BTU/hr maximum at 28.8 VDC
Isolation Voltage	50 V (continuous), Basic Insulation Type from Controller to Field (Field Inputs are not isolated from Field Power)
Channel-to-Channel, Low Level, Non-galvanic Isolation	10 VDC measured between the IN- leads (5 VDC if using ±10 V range). Maximum voltage between any two pins must be limited to 24 VDC. The allowed voltage on any Input pin from Field Ground is ±11 V.
External DC power Supply Voltage Voltage Range Supply Current	 24 VDC nominal 10..28.8 VDC 20 mA at 24 VDC
Dimensions (H × W × D), approx.	56 × 12 × 75.5 mm (2.21 × 0.47 × 2.97 in.)
Key switch position	3
Enclosure type rating	None (open-style)
Wire size	Determined by installed terminal block
Wiring category	2–on signal ports
Wire type	Shielded
Terminal base screw torque	Determined by installed terminal block
Weight, approx.	35 g (1.235 oz.)

Input Specifications

Input	**Specification**	
Inputs per module	System Configuration 1: 2 each 4-/3-/2-wire RTDs/Resistors System Configuration 2: 2 each V/I, 1 each 4-/3-/2-wire RTD/Resistor System Configuration 3: 1 each TC, 1 each 4-/3-/2-wire RTD/Resistor, 1 each CJC System Configuration 4: 2 each V/I, 1 each TC, 1 each CJC System Configuration 5: 1 each V/I, 2 each TC, 1 each CJC System Configuration 6: 3 each TC, 1 each CJC System Configuration 7: 4 each V/I	
Resolution	18 Bits	
ADC Type	Sigma Delta	
CMRR	>96 dB Typical with 4 Hz and 17 Hz filters	
NMRR	4 Hz Filter 74 dB minimum at 50 and 60 Hz 17 Hz Filter 65 dB minimum at 50 and 60 Hz 62 Hz Filter First notch at 31 Hz, typically 30 dB 470 Hz Filter First notch at 237 Hz, typically 35 dB	
Input ranges	0-20 mA, 4-20 mA, ±50 mV, ±100 mV, 0-5 V, 1-5 V, 0-9 V, ±9 V, types J, K, T, E thermocouple, 100Ω and 1000Ω PT385 and PT3916, 3000Ω resistance. pH sensor ±1 V	
Input Impedance Tolerances	Current Impedance: 253.0 ±4.5% ohms Voltage Impedance: ±5.5% ohms 9.5 Mohms at ±9 Vin, 1.4 Mohms at ±1 Vin	
Cable/Lead Resistance (applies to 3 and 4-wire RTD & resistance measurements)	2 Ohms maximum (equivalent to 300 ft., 18 AWG) to guarantee published accuracy.	
Data Format	Signed integer	
Maximum overload	Fault protected to 24 VDC	
Calibration	Factory calibrated, user calibration not supported	
Indicators	1 green/red module status LED 1 green/red network status LED 4 green/red input status LEDs	1 green/red module status LED 1 green/red network status LED 2 green/red input status LEDs

Input	Specification
Thermocouple Inputs	Linearization per ITS-90, The limits do not include the cold junction compensation or thermocouple sensor errors. System accuracy at 25 °C (Using 4 Hz and 17 Hz filters) Type J: ±0.6 °C maximum Type T (-190 °C to 400 °C): ±1 °C maximum Type T (-270 °C to -190 °C): ±7 °C maximum Type K (-200 °C to 1370 °C): ±1 °C maximum Type K (-270 °C to -200 °C): ±10 °C maximum Type E (-200 °C to 1000 °C): ±0.6 °C maximum Type E (-270 °C to -200 °C): ±5 °C maximum System accuracy at 0 °C to +55 °C (Using 4 Hz and 17 Hz filters) Type J ±1.2 °C maximum Type T (-190 °C to 400 °C): ±2 °C maximum Type T (-270 °C to -190 °C): ±14.0 °C maximum Type K (-200 °C to 1370 °C): ±2 °C maximum Type K (-270 °C to -200 °C): ±20 °C maximum Type E (-200 °C to 1000 °C): ±1.2 °C maximum Type E (-270 °C to -200 °C): ±10 °C maximum
CJC profile accuracy	±3 ºC maximum
CJC Sensor resolution	±0.4 ºC maximum for 0 to 60 ºC
CJC Sensor accuracy	±1 ºC maximum
Voltage Inputs	System accuracy at 25 ºC (Using 4 Hz and 17 Hz filters) ±20 µV maximum for ±50 mV inputs ±20 µV maximum for ±100 mV inputs ±3 mV maximum for the pH Sensor (±1.0 V range) ±3 mV maximum for 0-5 V inputs ±3 mV maximum for 1-5 V inputs ±10 mV maximum for 0-9 V ±10 mV maximum for ±9 V System accuracy at 0 °C to +55 °C (Using 4 Hz and 17 Hz filters) ±40 µV maximum for ±50 mV inputs ±40 µV maximum for ±100 mV inputs ±6 mV maximum for the pH Sensor (±1.0 V range) ±6 mV maximum for 0-5 V inputs ±6 mV maximum for 1-5 V inputs ±20 mV maximum for 0-9 V ±20 mV maximum for ±9 V

Input	Specification
Current Inputs	System accuracy at 25 ºC (Using 4 Hz and 17 Hz filters) ±20 µA maximum for 0-20 mA inputs ±20 µA maximum for 4-20 mA inputs System accuracy at 0 °C to 55 ºC (Using 4 Hz and 17 Hz filters) ±50 µA maximum for 0-20 mA inputs ±50 µA maximum for 4-20 mA inputs
RTD Inputs	System accuracy at 25 ºC (Using 4 Hz and 17 Hz filters in 3- or 4-wire mode, typical calibration interval of 2 years) ±0.5 ºC for 100/1000Ω Platinum 385 and 3916 System accuracy at 0° to 55 ºC (Using 4 Hz and 17 Hz filters in 3- or 4-wire mode, with a typical calibration interval of 2 years) ±0.6 ºC for 100/1000Ω Platinum 385 and 3916 ±0.3 ºC for 100/1000Ω Platinum (0-300 ºC measurement range)
Resistance Inputs	System accuracy at 25 ºC (Using 4 Hz and 17 Hz filters, (typical calibration interval of 2 years) ±1Ω for 3000Ω range System accuracy at 0-55 ºC (Using 4 Hz and 17 Hz filters, (typical calibration interval of 2 years) ±1.3Ω for 3000Ω range

Repeatability at 25 ºC

Device or Range	4 Hz Filter	17 Hz Filter	62 Hz and 470 Hz Filters[7]
Type J	±0.2 ºC	±0.4 ºC	±2 ºC
Type K (-200 ºC to 1370 ºC)	±0.2 ºC	±0.4 ºC	±4 ºC
Type K (-270 ºC to -200 ºC)	±2 ºC	±3.5 ºC	±25 ºC
Type T (-190 ºC to 400 ºC)	±0.2 ºC	±0.4 ºC	±4 ºC
Type T (-270 ºC to -190 ºC)	±1 ºC	±1.5 ºC	±20 ºC
Type E (-200 ºC to 1000 ºC)	±0.2 ºC	±0.4 ºC	±4 ºC
Type E (-270º C to -200 ºC)	±1 ºC	±1.5 ºC	±20 ºC
±50 mV	2.5 µV	3.2 µV	70 µV
±100 mV	4.6 µV	6.4 µV	60 µV
±9 V	0.48 mV	0.48 mV	2 mV
±1 V	±10 mV	±1 mV	±3 mV
0-5 V	±10 mV	±10 mV	±30 mV

[7] These filters do not reject 50/60 Hz. Repeatability for these filters is strongly dependent on how much 50/60 Hz noise is in the system.

Device or Range	4 Hz Filter	17 Hz Filter	62 Hz and 470 Hz Filters[7]
1-5 V	±10 mV	±10 mV	±30 mV
0-9 V	±20 mV	±20 mV	±60 mV
0-20 mA	5 µA	5 µA	4 Hz and 17 Hz filters only
IF4U-1 RTD, Platinum 385, 3916	±0.04 ºC	±0.05 ºC	±1 ºC
Resistance	±0.2Ω	±0.3Ω	±2Ω

Environmental Specifications

Environmental Tests	Industry Standards	Test Level Limits
Temperature (Operating) (Performance Criteria A)	IEC60068-2-1: (Test Ad, Operating Cold), IEC60068-2-2: (Test Bd, Operating Dry Heat), IEC60068-2-14: (Test Nb, Operating Thermal Shock)	-20 °C to +55 °C
Temperature (Non-operating) (Performance Criteria B)	IEC60068-2-1: (Test Ab, Unpackaged Non-operating Cold), IEC60068-2-2: (Test Bb, Unpackaged Non-operating Dry Heat), IEC60068-2-14: (Test Na, Unpackaged Non-operating Thermal Shock)	-40 °C to +85 °C
Humidity (Operating) (Performance Criteria A)	IEC60068-2-30: (Test Db, Unpackaged Damp Heat):	5% to 95% non-condensing
Vibration (Operating) (Performance Criteria A)	IEC60068-2-6: (Test Fc, Operating)	5 G at 10 Hz to 500 Hz, 0.030 in. max. peak-to-peak
Shock (Operating) (Performance Criteria A)	IEC60068-2-27: (Test Ea, Unpackaged Shock)	30 g,11 ms half-sine (3 mutually perpendicular axes)
Shock (Non-operating) (Performance Criteria B)	IEC60068-2-27: (Test Ea, Unpackaged Shock)	50 g, 11 ms half-sine (3 mutually perpendicular axes)
Radiated Emissions	CSIPR 11; Group 1, Class A	(Enclosure) Class A, 30 MHz to 1 G
Conducted Emissions	IEC 61000-6-4:2007	Group 1, Class A (AC Mains), 150 kHz–30 MHz

Environmental Tests	Industry Standards	Test Level Limits
ESD immunity (Performance Criteria B)	IEC 61000-4-2	6 kV Indirect (Coupling Plate) 6 kV Contact Discharge (to points of initial contact) 8 kV Air Discharge (to points of initial contact)
Radiated RF immunity (Performance Criteria A)	IEC 61000-4-3: Level 3	10 V/M with 1 kHz sine-wave 80% AM from 80 MHz to 2000 MHz 10 V/M with 200 Hz sine-wave 50% Pulse 100% AM at 900 MHz 10 V/M with 200 Hz sine-wave 50% Pulse 100% AM at 1890 MHz 1 V/M with 1 kHz sine-wave 80% AM from 2000 MHz to 2700 MHz (3 V/M goal)
EFT/B immunity (Performance Criteria B)	IEC 61000-4-4*	Signal Ports: ±3 kV at 5 kHz for 5 minutes, Criteria B ±2 kV at 5 kHz for 5 minutes, Criteria A ±2 kV at 5 kHz for 5 minutes, Criteria B (standard) Power Ports: ±2 kV at 5 kHz for 5 minutes, Criteria A ±2 kV at 5 kHz for 5 minutes, Criteria B (standard)
Surge transient immunity (Performance Criteria B)	IEC 61000-4-5	Signal Ports: ±2 kV line-earth {CM}at 2Ω on shielded ports Power Ports ±2 kV CM at 12Ω ±1 kV DM at 2Ω
Conducted RF immunity (Performance Criteria A)	IEC 61000-4-6	10 VRMS with 1 kHz sine wave 80% AM from 150 kHz to 80 MHz on signal and power ports
Magnetic Field (Performance Criteria A)	IEC 61000-4-8	30 Arms/m
AC Mains Voltage Dips, Interruptions and Variations	IEC 61000-4-11	Follow the 61000-4-11.

Regulatory Compliance

Certifications (when product is marked)[8] cULus	**UL** Listed for Class I, Division 2 Group A, B, C, D Hazardous Locations, certified for U.S. and Canada. See UL File E180101. **UL** Listed Industrial Control Equipment, certified for U.S. and Canada. See UL File E140954.
	Ex European Union 2014/34/EU
	ATEX Directive, compliant with: EN 60079-7; Increased Safety e (Zone 2) II 3 G Ex ec IIC T4 Gc
	EN 60079-0: ATEX General Requirements
CE	Certificate DEMKO 09 ATEX 0816599X
	UKCA and **UKCA Ex** (self-certified based on ATEX or IECEx report):
	Electromagnetic Compatibility Regulations 2016:
	BS EN 61131-2, BS EN 61000-6-4, BS EN 61000-6-2:
	Equipment and Protective Systems Intended for use in Potentially Explosive Atmospheres Regulations 2016:
	BS EN 60079-0, BS EN 60079-7
	CCC
	GBEx 2021312310000323
	GBEx 2021312310000341
	CE European Union 2014/30/EU EMC Directive, compliant with: EN 61000-6-4; Industrial Emissions EN 61000-6-2; Industrial Immunity EN 61326; Meas./Control/Lab., Industrial Requirements EN 61000-6-2; Industrial Immunity EN 61131-2; Programmable Controllers (Clause 8, Zone A & B)
	ROROC
	Arrêté ministériel n° 6404-15 du 29 ramadan 1436 (16 juillet 2015):
	NM EN 61131-2, NM EN 61000-6-4, NM EN 61000-6-2

[8] For the latest up-to-date information, see the Product Certification link at www.spectrumcontrols.com for Declarations of Conformity, Certificates and other certification details.

Index

Add-On-Profile · 3-8
ATEX Directive · 2-1
block diagram · 1-7
Conventions
  used in the manual · vi
EMC Directive · 2-1
Field Wiring Connections · 2-8
Filter
  Frequencies · 1-3
Generic Profile · 3-2
Grounding · 2-8
Hardware Features · 1-3
Hazardous Location · 2-2
Input Data · 3-16
Input Type · 1-2
LED · 1-5
Module Configuration · 3-10
Mounting · 2-4
Noise · 2-3, 2-9
Power Requirements · 2-2
power-up · 1-6
Specifications ·A- 1
Technical support
  contact information · vi
Wiring Diagram · 2-9

Corporate Headquarters
Spectrum Controls Inc.
1705 132nd Avenue NE, Bellevue, WA 98005 USA
Fax: 425-641-9473
Tel: 425-746-9481

Web Site: www.spectrumcontrols.com
E-mail: spectrum@spectrumcontrols.com

User's Manual Pub. 0300316-01 Rev. C